2020

Rules And Procedures

WISSOTA Sanctioned:

Late Models ■ Modifieds ■ Super Stocks
Midwest Mods ■ Street Stocks ■ Mod Fours
Pure Stocks ■ Hornets

Periodic Rules Updates Available At:

www.wissota.org

© Copyright 2020 WISSOTA Promoters Association

TABLE OF CONTENTS

BOARD OF DIRECTORS & OTHER OFFICIALS 1

DEFINITIONS 2

SECTION 1 - GENERAL RULES 3

SECTION 2 - GENERAL POLICIES 11

SECTION 3 - MINIMUM SPECIFICATIONS 17

SECTION 4 - POINT SYSTEM 21

SECTION 5 - ENGINE PROTEST RULE 23

SECTION 6 - ENGINE PUMPING RULE 24

2020 WISSOTA LATE MODEL RULES 26

2020 WISSOTA MODIFIED RULES 38

2020 WISSOTA SUPER STOCK RULES 49

2020 WISSOTA MIDWEST MODIFIED RULES 59

2020 WISSOTA STREET STOCK RULES 71

2020 WISSOTA MOD FOUR RULES 80

2020 WISSOTA PURE STOCK RULES 88

2020 WISSOTA HORNET RULES 93

GENERAL DISCLAIMER STATEMENT

The rules and/or regulations set forth herein are designed to provide for the orderly conduct of racing events and to establish minimum acceptable requirements for such events. These rules shall govern the condition of all events, and by participating in these events, all participants agree to comply with these rules. NO EXPRESS OR IMPLIED WARRANTY OF SAFETY SHALL RESULT FROM PUBLICATION OF, OR COMPLIANCE WITH, THESE RULES AND/OR REGULATIONS. They are intended as a guide for the conduct of the sport and are in no way a guarantee against injury or death to a participant, spectator, or official. The race director shall be empowered to impose any further restrictions that in his/her opinion do not alter the minimum acceptable requirements. NO EXPRESS OR IMPLIED WARRANTY OF SAFETY SHALL RESULT THEREFROM. Any interpretation of, or deviation from, these rules is left to the discretion of the officials. THEIR DECISION IS FINAL.

WISSOTA BOARD MEMBERS & STAFF

WISSOTA OFFICE STAFF:

CARSON GRAMM - EXECUTIVE DIRECTOR
24707 County Road 75, St. Augusta, MN 56301
Phones: Office: 320-251-1360 or Cell 320-221-6350
E-mail: carson@wissota.org

CALLIE SULLIVAN - OFFICE ADMINISTRATOR
DIRECTOR OF LICENSING & POINTS
24707 County Road 75, St. Augusta, MN 56301
Phone: Office: 320-251-1360 • Fax: 320-259-1409
E-mail: callie@wissota.org

BILL ENGELSTAD - TECHNICAL DIRECTOR
2328 3rd Ave East #1, Hibbing, MN 55746
Phones: Cell 218-208-7844
E-mail: bill@wissota.org or billengelstad@yahoo.com

WISSOTA BOARD OF DIRECTORS:

ROB PALMER President (2021)
302 Market St. #2, P.O. Box 54, Langford, SD 57454
Phone: Cell 605-228-2632 • E-mail: rob@wissota.org

PHIL MERTEN Vice President, Tech Committee (2021)
826 E Street, Sauk Centre, MN 56378
Phones: Cell 320-760-9614 • E-mail: philmerten61@gmail.com

JOHN (GUS) OMUNDSON Secretary/Treasurer, Scheduling Director (2020)
2644 Morris Thomas Road, Duluth, MN 55811
Phones: Cell 218-348-3276 • Home 218-726-1237
Fax: 218-727-8790 • E-mail: littlejohnnyo@msn.com

NIKKI ELTON Director (2020)
39613 Nacre St., Dalbo, MN 55017
Phones: 763-238-0053 Cell • E-mail: nikki.elton@yahoo.com

TIM CARLSON Director (2022)
25957 River Road, Cohasset, MN 55721
Phone: Cell 218-259-1571 • E-mail: rcrfam57@paulbunyan.net

MARK GEER Director (2021)
216 Dogwood St., New London, MN 56273
Phone: 320-220-7401 • E-mail: mark@wissota.org

DENNY NIESS Director (2022)
3413 Granite Way South, St. Cloud, MN 56301
Phone: Cell 320-492-6509 • E-mail: dniess@gcspeedway.com

DEFINITIONS

The following terms, as used in this rule book, shall have the following meanings:

"All The Dirt" The official newspaper of record for WISSOTA and one of the primary means of communication between WISSOTA and its participants regarding general information and amendment of rules through the issuance of technical bulletins.

Board The Board of Directors of WISSOTA, duly elected at its annual meeting, and whose names are specifically set forth immediately preceding these definitions in this rule book.

O.E.M. Means and refers to original equipment manufacturer.

Participant Each and every driver, car owner, sponsor, mechanic, crew member or any other pit personnel taking part in any way in any WISSOTA-sanctioned racing event. All such persons have voluntarily become involved in a WISSOTA-sanctioned racing event, with the full understanding that he/she must abide by all of the rules and regulations of WISSOTA. By their participation in a WISSOTA-sanctioned racing event, all such persons acknowledge that they are fully aware of the risks involved in the sport of auto racing and that by participating in such a racing event they assume all such risks. This includes any licensed WISSOTA driver entering the pit area whether racing or not. Participant also includes each and every inventor, manufacturer, distributor, supplier of racing parts sold, marketed, distributed, and/or are designed for use by WISSOTA drivers, car owners, sponsors, mechanics, and crew members.

Promoter An individual, partnership, corporation, association or other legal entity that has entered into a sanctioning contract, whether regular, special or probational, with WISSOTA for the conduct of WISSOTA sanctioned racing events and remains solely responsible for the conduct and promotion of the racing event and the condition and safety of the promoter's facility at which the racing event is conducted. Note: A driver possessing a promoter's pass cannot use that pass for any show in which he/she will be a competitor, but the pass may be used to allow admission of one guest.

Racing Event Any WISSOTA racing event.

Track Official An employee, independent contractor or agent of a promoter who assists in the conducting and promoting of the racing event, and interpreting and enforcing the rules, at a promoter's racing facility.

Track Rules The rules for a racing event at a particular racing facility, as published by the promoter, posted at the racing facility, or announced at any drivers' or pit meeting prior to any racing event.

WISSOTA The common name for the sanctioning body legally known as the WISSOTA Promoters Association, Inc., a Minnesota non-profit corporation.

WISSOTA Auto Racing The registered trade name and service mark issued by the United States Patent and Trademark Office for the WISSOTA Promoters Association, Inc. WISSOTA is also seeking trade name and service mark protection for the word 'WISSOTA'.

WISSOTA Office The office of WISSOTA located at 24707 County Road 75, St. Augusta, MN 56301. Phone 320-251-1360, fax 320-259-1409.

WISSOTA Rules The rules and procedures set forth in this rule book, as adopted by the WISSOTA promoters at their annual meeting, and as amended in accordance with paragraph 1.4, and in effect for all WISSOTA-sanctioned racing events.

WISSOTA-Sanctioned A promoter, or racing event, which has been specifically sanctioned by WISSOTA based upon a regular, special or probational sanctioning contract.

SECTION 1 - GENERAL RULES

1.1 GENERAL APPLICATION

The WISSOTA rules shall apply to each and every participant who participates in any WISSOTA-sanctioned racing event. All participants subject to the WISSOTA rules are expected to know the rules and any claimed ignorance of the rules will not be accepted or tolerated. All racers, competitors, suppliers or sponsors and any other participants having any question regarding the legality of any product must request the WISSOTA Tech Committee to review the same and render an opinion as to legality. All new products must be pre-approved by WISSOTA's Tech Committee. Any and all parts including but not limited to clutches, transmissions, engines, rearends, frames, and any and all other component parts of a racecar that have not been prior approved by the Tech Committee will be considered illegal until such time that the Tech Committee has reviewed the product and rendered its decision as to whether or not the products falls within the WISSOTA racing rules. The decision of the WISSOTA Tech Committee is final. The WISSOTA Tech Committee's decision will be premised upon the intent and spirit of these rules. The WISSOTA Tech Committee will delineate what is authorized and not authorized under the rules. WISSOTA reserves the right to adjust any and all weight differences as they see appropriate. Only WISSOTA's Tech Committee has the authority to review a product and render a decision as to whether the product falls with in WISSOTA's racing rules. No individual member of the Tech Committee, or individual promoter, tech inspector, nor any other person can render said decision. The decision must be rendered solely by the WISSOTA's Tech Committee. The product seeking approval must be shipped to the President of WISSOTA and the President will then forward the product to the Tech Committee members for review. The product must be shipped postage pre-paid to WISSOTA. The Tech Committee shall render a decision no later than 60 days after the product has been received by WISSOTA's President. WISSOTA does not waive its right to enforce the requirement of pre-approval of a product by the Tech Committee even though the product has been utilized by race car owners, drivers, mechanics or others prior to being submitted to the WISSOTA Tech Committee.

1.2 EFFECTIVE DATE

The WISSOTA rules, and any amendment of rules, are effective upon the date of publication by WISSOTA, regardless of when a person subject to the rules receives actual notice of the rule.

1.3 EXHIBITS AND DRAWINGS

Exhibits and drawings are deemed rules illustrations and are enforceable rules.

1.4 AMENDMENT OF RULES

WISSOTA reserves the right to add to, delete, supersede or modify any rules, exhibits or drawings that WISSOTA deems necessary for the betterment and/or safety of racing. The WISSOTA rules may be amended at the annual meeting of WISSOTA, and subsequent publication in the WISSOTA rule book. In addition, the Board, pursuant to authority conferred by the promoters, may issue amendments during the racing season in the form of technical bulletins, which shall be published in "All The Dirt" and on the WISSOTA website, where they can be reviewed by competitors, promoters and track tech officials. Participants shall be responsible for being aware of and complying with all such amendments issued.

1.5 APPLICABILITY

The WISSOTA rules are applicable to all WISSOTA-sanctioned events.

1.6 COMPETITOR OBLIGATION

Every driver must inspect the racing surface and the race track area to learn of any defects, obstructions, or anything which, in the driver's opinion, is unsafe, and the driver shall report that condition in writing to a WISSOTA or track official. Any driver entering any racing event is considered to have inspected the track and determined that all conditions are satisfactory. If the driver does not feel that conditions are satisfactory, then the driver should not race. The driver further acknowledges that the driver is aware that auto racing involves risks and that by competing in an event the driver assumes these risks with full awareness and knowledge.

1.7 FINALITY OF DECISIONS AND INTERPRETATIONS AND COVENANT NOT TO SUE

1.7.1 THE DECISIONS OF WISSOTA RACE OFFICIALS, OR TRACK OFFICIALS, AT A WISSOTA SANCTIONED EVENT, INCLUDING THE INTERPRETATION AND APPLICATION OF RULES AND THE SCORING OF POSITIONS, SHALL BE FINAL, BINDING AND NON-APPEALABLE, EXCEPT AS PROVIDED IN PARAGRAPH 1.8 BELOW.

1.7.2 ALL PARTICIPANTS, AS A CONDITION OF PARTICIPATING IN A WISSOTA-SANCTIONED RACING EVENT, AGREE THAT ALL DECISIONS OF WISSOTA RACE OFFICIALS, OR TRACK OFFICIALS, REGARDING THE INTERPRETATION AND APPLICATION OF THE WISSOTA RULES, AND THE SCORING OF POSITIONS, SHALL BE NON-LITIGABLE. ALL PARTICIPANTS FURTHER COVENANT AND AGREE THAT THEY WILL NOT INITIATE ANY TYPE OF LEGAL ACTION AGAINST WISSOTA, OR A WISSOTA PROMOTER, TO CHALLENGE SUCH DECISIONS, TO SEEK MONETARY DAMAGES, TO SEEK INJUNCTIVE RELIEF OR TO SEEK ANY OTHER KIND OF LEGAL REMEDY. IF A PARTICIPANT PURSUES ANY SUCH LEGAL ACTION WHICH VIOLATES THIS PROVISION, THEN THE PARTICIPANT EXPRESSLY AGREES TO REIMBURSE WISSOTA, OR THE WISSOTA PROMOTER, FOR ALL OF ITS ATTORNEY'S FEES AND COSTS IN DEFENDING AGAINST SUCH LEGAL ACTION.

1.8 APPEAL RIGHTS AND PROCEDURES

If a track has reported an offense or infraction to WISSOTA, in accordance with Rule 1.13, then a participant who has been suspended, or fined $500.00 or more by WISSOTA, may seek an appeal hearing regarding the fine or suspension as follows:

1.8.1 Appeal Hearing

1.8.1.1 Procedure A participant desiring an appeal hearing of action taken by WISSOTA must submit a written request for appeal hearing, accompanied by any relevant documentation, within the time, and in the manner, specified in paragraph 1.8.1.3 below.

1.8.1.2 Appeal Hearing Fee The request for an appeal hearing must be accompanied by a fee of $350.00 in cash, cashier's check or certified funds, which shall be non-refundable unless the hearing panel decides in the appealing participant's favor.

1.8.1.3 Hearing Within fifteen (15) days of the receipt of the request for appeal hearing, the Board shall appoint an appeal panel

and shall notify the participant of the date, time and place of the appeal hearing, which shall be held at the next scheduled board meeting. The panel will decide on the appropriate procedure for conducting the hearing and shall not be bound by formal rules of evidence or procedure but shall pursue the best procedure for obtaining the relevant facts to reach a decision. The appealing participant shall appear in person at the hearing (but not through a representative or an attorney) and may be accompanied by not more than three witnesses. WISSOTA's head tech inspector, or other designated WISSOTA person, shall appear in person at the hearing (but not through any representative or an attorney) and may be accompanied by not more than three witnesses. No other persons shall be present during the hearing. The President of WISSOTA or his designate shall conduct the hearing. No record of the hearing shall be made by either the participant or WISSOTA by tape recording, court reporter or any other method.

1.8.1.4 Hearing Panel Decision After the hearing, a decision will be made by the hearing panel and will be mailed to the participant by certified mail, return receipt requested. The decision of the appeals panel shall not be further appealable within WISSOTA or to any court, it being the agreement and understanding that this appeal hearing is the sole and final remedy for appeal of fines or suspensions.

1.8.2 Time for Filing, and Contents of, Request for Appeal Hearing
A request for an appeal hearing must be made in writing by the participant and sent to the Board, at the WISSOTA office, with a postmark no later than five (5) days after the date of receipt of written notice by the participant informing him/her of the imposition of the fine or suspension. The written request must specifically state what parts of the WISSOTA action are to be reviewed, or are being appealed, and must set forth with particularity the grounds or reasons why the participant believes the WISSOTA action should be changed or overturned.

1.8.2.1 Composition of Appeal Hearing Panels
The appeal hearing panel shall consist of three (3) members, designated by the Board, none of whom were involved in the original determination resulting in the fine or suspension.

1.8.4 Continuation of Fines and Suspensions Fines and suspensions imposed shall remain in effect during the time period that any request for an appeal hearing is pending. If driver pays fine after suspension has been served, the driver waives his right for any further appeal hearing. Driver also understands that the suspension and hearing shall not be further appealable within WISSOTA or to any court of law, it being the agreement and understanding that by paying fine and serving suspension that this is the final remedy.

1.8.5 Arbitration Procedure Other than expelling, suspending or terminating a promoter's association/membership with WISSOTA pursuant to M.S.A. § 317A.411, should any participant or promoter seek a further appeal of WISSOTA's decisions regarding the participant and/or promoter's actions or inactions despite the provisions as contained in paragraph 1.7.1, 1.7.2, and 1.8.1.4, all such controversies, claims, must be resolved by binding arbitration under the Federal Arbitration Act or if not applicable, pursuant to the American Arbitration Association, Commercial Arbitration Rules. The arbitrator shall follow controlling

law under either the Federal Arbitration Act or the American Arbitration Association, Commercial Arbitration Rules. The alleged aggrieved party can only pursue provisional remedies in a state or federal court of the State of Minnesota pending the outcome of an arbitration hearing. The pursuit of provisional remedies in state or federal court of Minnesota is limited solely to seeking temporary injunctive relief or a restraining order and no other judicial relief is permitted. Seeking judicial relief shall not constitute a waiver of the requirement to arbitrate. The judgment upon the arbitrator's award may be entered in Hennepin County, Minnesota, and transferred to any applicable jurisdiction for enforcement. Arbitration is mandatory, binding and non-waivable except upon mutual consent of both WISSOTA and the party seeking arbitration.

The parties will have the arbitration administered either by the American Arbitration Association or the parties can agree to have a mutually agreeable attorney or judge arbitrate the proceeding. Only one arbitrator shall preside over the proceedings. The arbitrator shall be mutually selected by the parties. All arbitration proceedings shall be conducted in Minneapolis, Minnesota, or another location mutually agreeable between the parties. Under no circumstances will WISSOTA nor any other participant in the arbitration proceedings be liable for payment of any punitive damages, attorney's fees, costs or disbursements including witness fees, mileage, deposition costs, or other charges in connection with said arbitration claim. Any party seeking arbitration must do so within 6 months of any adverse decision rendered by WISSOTA or the claim/controversy is forever barred.

1.9 VIOLATION OF SPIRIT AND INTENT OF RULES & UNSPORTSMANLIKE CONDUCT

Any participant who defies or violates the intent or spirit of the WISSOTA rules shall be considered to have engaged in unsportsmanlike conduct and shall be dealt with by WISSOTA or track officials depending upon the nature of the infraction. Unsportsmanlike conduct/fighting will result in a 30 day suspension, a $1,000.00 fine, loss of all points (both national and track), and one year probation. Second violation while still on probation shall result in another fine (if applicable) of up to $1.000.00 and a one year suspension from the date of the second violation. Any unsportsmanlike conduct is a non-appealable offense.

1.10 RESERVED PARTICIPATION RIGHT

WISSOTA or the track promoter reserves the right to refuse to accept the entry of any car or participant. Furthermore, WISSOTA, or the track promoter, reserves the right to revoke or cancel any entry, or any participant's claimed right to be on the track premises, if it is felt or determined that a participant's presence or conduct is not in the best interest of the sport of auto racing, the other competitors, the spectators, track management and/or employees or WISSOTA.

1.11 CONDUCT

1.11.1 Driver Responsibility The driver is responsible for the actions of his pit crew in all respects. The driver shall be the sole spokesperson for his/her car owner and pit crew in any and all matters, and must talk with the chief WISSOTA or track official in charge regarding their conduct or behavior.

1.11.2 Assault/Abuse of Officials/Participants and minor unsportsmanlike actions No participant shall engage in improper behavior on or off the track, in or out of the race car, nor shall he or she subject any WISSOTA official, track official, track employee, sponsor, or participant to any abusive or improper language at any time. Any driver who gets out of his/her race car, or any

participant who verbally assaults or threatens any WISSOTA official, track official, track employee, sponsor or another participant may be suspended for up to two weeks from the date of infraction, may be fined up to $500.00, may lose all WISSOTA points (both national and track points), and may be placed on probation for up to one year (or a combination of penalties). Loss of points are at the discretion of the track officials and based on the severity of the violation. Any violation of this rule is a non-appealable offense.

1.11.3 Alcoholic Beverages Consumption of beer or alcoholic beverages in the pit area, or being under the influence of beer or alcoholic beverages in the pit area, is prohibited until the entire program for all divisions is completed. If a participant is caught consuming alcoholic beverages in the pit area, or is deemed to be under the influence of alcoholic beverages in the pit area, before the entire program for all divisions is completed, he/she shall be immediately ejected from the race track premises and shall be subject to a mandatory fine of $500.00 and a 90-day suspension.

1.12 WISSOTA DRUG POLICY

1.12.1 Illegal Drugs Definition Illegal drugs are those substances or drug substances defined and prohibited by state and/or federal laws.

1.12.2 General Prohibition Possession or use of illegal drugs or drug substances, as defined above, is prohibited in any form, by any participant at a WISSOTA sanctioned track, either on the race track grounds or in any area considered to be used in the operation of the race track, such as parking lots or leased properties.

1.12.3 Participant A participant is as defined in the definitions in this rule book. All such participants are considered to be responsible for their personal conduct.

1.12.4 Specific Prohibition, Violations and Penalties Any person who is:

1.12.4.1 found to be in possession of, or under the influence of, any illegal drug or drug substance on the race track property; or

1.12.4.2 arrested by duly constituted authorities and charged with possession and/or use of illegal drugs or drug substances, regardless of whether the offense occurred on or off the race track property; or

1.12.4.3 formally charged by a court of law with any illegal drug violation, regardless of whether the offense occurred on or off the race track property,

1.12.4.4 SHALL BE SUBJECT TO THE FOLLOWING PENALTIES BY WISSOTA:

1.12.4.5 Suspension from competition and eviction from all WISSOTA sanctioned tracks, and denial of further entry to WISSOTA sanctioned events for a period to be determined by WISSOTA officials.

1.12.4.6 Any participant who is formally charged by a court of law with an illegal drug violation, regardless of the level of the offense, upon WISSOTA being so advised, shall be suspended from all forms of participation at WISSOTA-sanctioned events until such time as the charges are fully adjudicated through the legal process.

1.12.4.7 Any participant convicted of an illegal drug violation, regardless of the level of the offense, by a court of law shall be prohibited from taking part in any WISSOTA sanctioned event for a minimum period of one (1) year from the date of conviction.

1.12.4.8 In addition, during any suspension imposed above, all point fund money, both track and national, including all contingency awards, shall be held by the track or WISSOTA pending adjudication of the charges and shall be forfeited if the participant is convicted of the charges.

1.12.5 Appeal and Hearing Any participant suspended for violation of these drug policy rules will be granted a formal appeal hearing by a panel designated by the Board, provided the suspended participant requests such a hearing, to the Board in writing, within fourteen (14) calendar days of the date of suspension. It is the responsibility of the suspended participant to make such a request for a hearing.

1.12.6 Reinstatements A participant suspended for violation of these drug policy rules, EXCEPT IN THE CASE OF PERSONS CHARGED WITH SELLING DRUGS, may as the result of a decision reached through the appeal and hearing process be reinstated, if:

1.12.6.1 In the case of drug use, it is mutually agreed that the participant, at his or her own expense, will produce documentation from a physician licensed within the state, certifying that he or she is drug-independent, as a result of random and periodic examinations and urinalysis testing, made at the request of WISSOTA.

1.12.6.2 In the case of drug possession, that the participant produces evidence, satisfactory to the hearing panel, that he or she was not in possession of illegal drugs.

1.12.7. Prescribed Drugs If a participant is using prescription drugs on the advice of a physician, such use must be reported to the chief pit steward or racing director prior to the participant's entry into any race track activities. Failure to so notify will subject the participant to penalties as prescribed above.

1.13 REQUIREMENTS REGARDING WISSOTA FINES AND SUSPENSIONS

Except for conduct offenses under Rule 1.11, which race tracks may report to WISSOTA at their discretion, if there is a rules violation, offense or infraction at a race track, then the track must put the facts of the rules violation, offense or infraction in writing and send them to the WISSOTA office within seven (7) working days of the rules violation, offense or infraction and impose any necessary suspensions or fines.

1.14 PROBATION AND SUSPENSIONS

1.14.1 Probation All fines and suspensions will automatically carry a one-year-from-date-of-infraction probationary period. A second violation, within the probationary period, shall result in a fine (if applicable) and one-year suspension from the date of the second violation.

1.14.2 Fines and Suspensions A participant fined and suspended in one class is suspended from participating in all other classes until the expiration of the suspension and the payment of the fine. However, participants shall only lose national and track points in the class for which the fine and suspension was imposed.

1.15 DURATION OF PENALTIES

All penalties will apply throughout the entire WISSOTA racing season and will apply to all WISSOTA sanctioned events. Any suspensions of ninety (90) days or less, which have not been fully served as of the end of the national point racing season as specified in paragraph 2.8, will commence with the beginning of the point season in the following year as specified in paragraph 2.8 and continue until fully served.

1.16 ILLEGAL PARTS

1.16.1 Illegal Parts Illegal parts shall be any parts or components of a race car, or any alterations or modifications to any such parts or components, that do not meet the particular WISSOTA rules and specifications of the class in which the race car is competing.

1.16.2 Illegal Being illegal consists of any aspect of the race car which violates, or results in a violation, of any WISSOTA rules or specifications.

1.16.3 Disallowed If Not Allowed If the rules do not specifically allow a part or component, or do not allow specific alterations or modifications to a part or component, then that part or component is disallowed.

1.16.4 Removal of Identifying Marks Any grinding, defacing or otherwise removing or obliterating of casting marks, casting numbers or any other identifying marks or numbers on an engine or chassis part will automatically render that part illegal, except that this particular subparagraph shall not apply to Late Model engine blocks.

1.16.5 Penalty Except for a specific penalty as otherwise provided, the penalty for illegal parts, or being illegal, as defined above, whether discovered through a post-race inspection, through tear down, as a result of a protest or in connection with a claim, shall be a $1,000.00 fine ($500.00 fine for Street Stocks, Midwest Modifieds, Mod Fours, Pure Stocks and Hornets), a suspension of thirty (30) days, loss of all points, including all national points and all track points earned at all tracks, and forfeiture of all money and awards earned for that event. The above prescribed suspension of 30 days is mandatory for the following infractions: refusal of a claim, refusal of tech inspection, misconduct, traction control or treated tires. If charged with infractions other than those, the driver may opt to instead pay a fine of twice the prescribed amount, then return to racing at any time after WISSOTA staff confirm receipt of the payment.

1.16.5.1 Illegal tires, all classes, first time offenders: If a driver is found with improper (illegal) tires on the front or back of the car, that driver will be disqualified for that race and will lose all track and national points and prize money for that race. If this infraction occurs during a qualifying race, the driver will be disqualified from that race with the loss of track and national points for that race, but will be allowed to start at the rear of the B or A feature if the infraction is corrected. Should there be a full field already in the feature, the disqualification will stand for the entire race program. The driver will also be placed on a one year probation period beginning from the date of the infraction.

1.16.5.2 Illegal tires, all classes, second time offenders: Loss of all track and national points year to date. $500 fine to be paid before driver is allowed to race again plus a 30 day suspension of driver in all divisions.

1.16.5.3 No softening or conditioning of tires is allowed in any class. Any tire can be confiscated by a WISSOTA or track tech official on any race night at any track to be evaluated and returned within a reasonable period of time. Fines and punishment for illegally softening or conditioning tires will include a minimum $1,000 fine and 12 month suspension.

1.16.5.4 Tire protest: A driver may protest the tires of another competitor in his/her class. The fee shall be $100, remitted to the promoter. The promoter will send a sample of the protested tire(s) to an independent lab for analysis.

1.16.6 Penalties For Other Infractions

1.16.6.1 Non-Fineable infractions include a car that is found after a race with a short wheel base, is light at the scale, has body parts that do not meet the rules, has any suspension part that does not meet the rules, has wheels that do not meet the rules, or does not have the proper engine setback. This type of infraction will result in a disqualification with loss of points and winnings for that race only. If the infraction is fixed, the car may run in the next race.

1.16.6.2 Major Fineable/Suspension infractions include a car that's found after any race with a transmission or transmission parts that do not meet the rules, any differential part that does not meet the rules, or any engine parts that do not meet the specifications for that class. Specific examples include these and other components: carburetors, cylinder heads, engine blocks, intake and exhaust manifolds, push rods, crankshafts, camshafts, lifters, rocker arms, guide plates, distributors or any other engine parts that do not meet the specifications listed for that division. The fine and/or suspension applied will be as described earlier in section 1.16.5.

1.16.6.2 Minor Fineable Infractions including violations of booster height, carb spacer, gaskets, epoxy on carb, fuel will carry a penalty that includes a $100 fine, loss of all track and national points, plus confiscation of illegal part(s). Driver may race again when fine is paid but will be placed on probation, and if caught with same infraction again during same calendar year, this will become a fineable infraction as described in 1.16.6.2 above.

1.17 RESERVED TEAR DOWN RIGHT

1.17.1 Tear Down After the feature race, WISSOTA, or the track official, reserves the right to tear down the engine of any race car in any class. This reserved tear down right is separate and distinct from any inspection to which any race car in any class is subject under Rule 2.11.

1.17.2 Procedure A tear down shall consist of the disassembly of the upper end, or lower end, or both, of the engine. An upper-end tear down includes, but is not limited to, the removal of the carburetor, spacer plates or adapters, valve covers, intake manifold, exhaust manifold, headers, valve train components and heads. A lower-end tear down includes, but is not limited to, removal of oil pan, crankshaft, rods and pistons.

1.17.3 Fee for Tear Down WISSOTA, or the track official, shall advise the driver that a tear down is requested and shall post a tear down fee (cash only) that is equal to the protest fees set forth in Paragraph 6.5. If, after tear down, the engine is found to be legal, then the posted tear down fee will be paid to the driver. If, after tear down, the engine is found to be illegal, the posted tear down fee will be retained by WISSOTA, or the track official.

1.17.4 Illegal Parts If any engine parts are found to be illegal, the provisions of Rule 1.16 regarding illegal parts, and of Rule 1.18 regarding confiscation of illegal parts, shall apply.

1.18 CONFISCATION OF ILLEGAL PARTS

1.18.1 All illegal parts or components discovered through inspection, through tear down or as a result of a protest or claim, shall be confiscated by track officials and forfeited by the participant to WISSOTA.

1.18.2 All such forfeited parts, after being tagged with numbered tamper-proof tags, shall be delivered by track officials to WISSOTA and shall become the property of WISSOTA to be disposed of in its discretion, after any fines for the infraction are paid. All appropriate documentation must be submitted by the

promoter/track official to the WISSOTA office within forty eight (48) hours of the decision rendering the part(s) illegal.

1.18.3 Failure of a participant to surrender illegal parts for confiscation shall result in a separate penalty, in addition to any other penalties for illegal parts under these rules, of two (2) times the estimated retail value of the illegal parts (as determined by WISSOTA).

1.19 INDEPENDENT CONTRACTORS

All WISSOTA participants are independent contractors and are not the agents or employees of WISSOTA or any WISSOTA sanctioned race track. WISSOTA participants, as independent contractors, are solely responsible for preparing their race cars to perform in WISSOTA sanctioned racing events in accordance with the WISSOTA rules and procedures. As independent contractors, WISSOTA participants are solely responsible for compensating their employees, agents or pit crew members. WISSOTA participants, as independent contractors, also assume full responsibility for reporting or filing any reports or tax returns with the appropriate authorities on any and all earnings or funds received as a result of their participation in WISSOTA sanctioned racing events, including, but not limited to, Federal Social Security taxes, Federal income taxes, state income taxes, Federal and state withholding taxes, unemployment taxes and workers compensation insurance.

1.20 COMPETITOR AGREEMENT REGARDING RULES

A participant, by competing in a WISSOTA-sanctioned event, specifically agrees and acknowledges the following:

1.20.1 That he or she is familiar with and understands all of the WISSOTA rules and procedures as set forth in this rule book.

1.20.2 That by applying for a WISSOTA competitor's license, or by participating in a WISSOTA sanctioned racing event, he or she specifically agrees to abide by all of the WISSOTA rules and procedures.

1.20.3 That by entering a WISSOTA-sanctioned racing event, a competitor certifies that his or her race car meets all of the requirements of the WISSOTA rules for participating in a WISSOTA sanctioned racing event.

1.20.4 That, if as a result of an inspection, tear down, protest, or claim, a competitor's race car is determined to be illegal, it is the sole responsibility of the competitor, who bears the burden of proof, to prove that his or her race car is in compliance with the applicable WISSOTA rules and requirements.

SECTION 2 - GENERAL POLICIES

2.1 PREVAILING POLICY

2.1.1 Any disagreements over technical questions or operations will be resolved by WISSOTA or track officials. When their decision is rendered, such decision is final and binding, except as provided in Paragraph 1.8.

2.1.2 WISSOTA or track officials will establish the length, frequency and administration of all events and programs, and when their decision is rendered, that decision is final and binding and non-appealable.

2.2 LICENSING AND REGISTRATION

2.2.1 To race in a WISSOTA sanctioned class driver must be at least 16 years of age. WISSOTA may issue any driver under 16 a (restricted) license. However any driver under 16 years of age with a (restricted) license must receive permission at each individual race track prior to racing at that facility. All drivers, regardless of age, must have signed an application for a WISSOTA competitor's

license, must have not been convicted of any illegal drug violation during the one year period prior to the date of application, must have paid the required fee and be in good standing. The license application for all drivers under the age of 18 must also include the signature of parent or legal guardian regardless of division. For any driver under the age of 17, a certified birth certificate must also be provided with the license application. All restricted licenses must be purchased through the WISSOTA office; they will not be available at any track. Restricted license drivers must contact race tracks at least 24 hours in advance to get approval to participate in any event.

2.2.2 WISSOTA reserves the right to deny a competitors license to any driver.

2.2.3 Any driver who permits someone else to use his/her competitor's license will be subject to a mandatory fine of $500.00 and/or disqualification.

2.2.4 A current WISSOTA competitor's license and a driver's license or picture I.D. must be presented at the time of sign-in and registration.

2.2.5 A driver must have a WISSOTA license to receive any national or track points, and all points only go with the driver.

2.2.6 Only a fully-licensed WISSOTA driver may protest.

2.2.7 Temporary licenses may be issued; however, a temporary license may be protested but may not protest, may be claimed but may not claim and no points will be issued for a temporary license.

2.2.8 No driver or other participants may enter the race track or pit area until he/she has personally signed all releases, registrations and entry forms. No person will be permitted to sign the release sheet for any person other than himself/herself. Any participant who fails to sign all release and registration forms will be disqualified and any prize money will be forfeited.

2.2.9 **WISSOTA 100s Eligibility** - To participate in any WISSOTA 100 event, a driver must have a full WISSOTA competitor's license (not a temporary license).

2.2.10 2020 WISSOTA Competitor Licenses & Fees:

All licenses should be purchased online at www.wissota.org.
If a driver is unable to purchase online, it is acceptable to mail a license application to the WISSOTA office as outlined on the license application form.
ALL licenses purchased at the track will carry a $25.00 service fee in addition to the cost of the license, which is outlined below:
WISSOTA Late Model - $130.00 • WISSOTA Modified - $110.00
WISSOTA Super Stock - $100.00
WISSOTA Midwest Modified, Street Stock or Mod Four - $90.00
WISSOTA Pure Stock or Hornet - $50.00 No driver may purchase a Hornet division license if they have ever raced in the Super Stock or any higher division. Any driver who has raced in the Midwest Modified division or lower class, for one season or less, <u>or has not raced in the past five years</u>, may purchase a Hornet division license. <u>A Hornet driver may also hold a license in the Pure Stock division only</u>. Any driver who has won a national championship in any class (or two in Hornets), is ineligible to purchase a Hornet license. <u>If you are found to have violated this restriction, WISSOTA retains the right to cancel your Hornet license and you will not be eligible for any refund of your license fee</u>.

2.2.10.1 Each license will include an excess medical insurance policy for the driver as well as a subscription to All The Dirt! Racing News.

2.2.10.2 Temporary Licenses - $55.00 for Late Model, Modified, Super Stock, Midwest Mod, Street Stock or Mod Four, $25 for Pure Stock or Hornet (valid for one event only, cannot be credited toward full

license upgrades). Temp licenses may be purchased at the track.

2.3 PIT AGE REQUIREMENT

All persons under the age of eighteen (18) must have a signed minor release form on file at each race track which they desire to enter. Forms available at each track.

2.4 RACE PROCEDURES

2.4.1 Every person driving a race car on the track must wear the required helmet and cinched harness and lap belt whenever in the race car, including track packing, warm-ups, hot laps and races.

2.4.2 No person, except the driver and WISSOTA and/or track officials, is allowed on the race track at any time after the race starts.

2.4.3 All drivers are responsible for registering their cars and having a number drawn for their starting position in the heat race. A car may be registered and compete in only one class per night (event).

2.4.4 If a car is unable to start the race, all cars behind that car's position will advance one position (either directly, or by criss-crossing their cars, at the track's option).

2.4.5 When a race is stopped after the completion of at least one (1) lap, cars shall be lined up in the order in which they were running at the completion of the last full lap before being stopped. The car or cars causing the race to be stopped, if any, shall start at the rear. If a car causes a race stoppage twice in the same race, that race car will be sent to the pits, but will be scored and receive points for its finishing position as if it had dropped out of the race at that time.

2.4.6 A race may be stopped at the discretion of the starter or officials at any time they consider it dangerous or unsafe to continue. If a car loses front bumper or back bumper or fuel cell guard, the car must go to the pits for the remainder of said race.

2.4.7 Any car being lapped consistently by the field may be black-flagged at the flagman's discretion.

2.4.8 Track promoters may run multiple heats in any class, but there must be a minimum of five (5) cars in each heat. If a heat race is run with less than five cars when more than five cars are in attendance, no points will be issued for that race and the promoter/track will be subject to a fine of $250.00. Nine (9) or fewer cars entered in any class shall be limited to one heat race. Driver can only start the heat race that he/she was scheduled to start.

2.4.9 Raceceivers and transponders allowed, but only for track officials to communicate with drivers and score cars. No radio communication is allowed between competitors, crew members, fans or other participants.

2.4.10 Restart Line-Up. All tracks will use double file restarts, Delaware style with the leader in front, alone in row one. Second place driver will get choice of inside or outside starting location. Fourth place will always be inside row three. Promoter may use discretion and revert to single file restarts if track conditions exist that warrant a single file restart in the spirit of good and fair competition; promoter is not required to revert to single file restarts at any time. Any abuse of discretionary actions by the track officials in deviating from the double file restarts may result in a fine, probation, suspension or any combination thereof. The intent of this rule is to provide consistent and unified procedures for the competitors.

2.5 DRIVER, CAR OR ENGINE CHANGES

2.5.1 No driver or car changes are allowed after the heat races.

2.5.2 The driver may qualify only one car in a class. In the event of a wreck in practice, the driver will be allowed to qualify another car provided that that car has not yet been qualified.

2.5.3 If a driver changes engines between the qualifying event and the next event, he or she will have to start in the last position in the main event. This rule will be exempt on multiple-day events.

2.5.4 For multi-day races, you must race the same car, if starting feature as a provisional, as you raced in the B-feature if both B feature and feature fall on the same day.

2.6 POINT AVERAGE SYSTEM

2.6.1 For regular weekly events, all tracks must use the point average system:

A. A point-average system, involving a draw for the heat races and the use of a three-week point average (based upon the last three events that a competitor had competed in at that race track) for the feature race.

B. Specials may have the feature races lined up by any manner (examples: redraw, straight-up, dash, passing points etc.). For all heat races, drivers must draw for heat positions.

C. Opening regular night: draw for heats, redraw for feature. See 2.6.3 below for number of cars to be placed in redraw.

D. After opening night, when a driver that is in attendance for the first time for a regular night race and he/she makes the invert/"qualifies," he or she will be allowed to use a redraw for the feature race for a position of five on back in the invert. If there is only one heat, new drivers will draw for existing invert positions remaining. The first four positions will not be allowed in the redraw. This is a first-time option used only by a first time visitor after opening night of said track.

E. If a driver is disqualified for misconduct during any race event, that driver will lose all points for all races at that event. In this instance, the resulting zero point night will not be used in the calculation of the driver's three week point average; the average for the three events previous to the misconduct penalty will be used to calculate the driver's point average for the next event at that track.

F. If a driver is returning from a track suspension or complete WISSOTA suspension, that driver shall be treated as a new driver for line-up purposes and will be lined up according to rule D above at the first regular event back at that track. The results of that single regular event will then determine the point average for that driver (example: if a driver accumulates 50 points at that single event, that driver's average is 50 points; 50 points divided by one event). If that driver returns to the track again, the point average will be determined by averaging the first night back from suspension and the second night back after the suspension (example: if a driver accumulates 50 points at first event, then 54 at second event, the point average is 52; 50+54 divided by two). The results of the driver's third event back after the suspension will enable the driver to have a three-night point average.

2.6.2 Under the point-average system, the same number of cars as specified in paragraph 2.6.3 must be inverted for the feature race.

2.6.3 The inversion for all classes of cars is as follows: one (1) heat race, invert five (5); two (2) heat races, invert four (4); three (3) heat races, invert three (3);

four (4) heat races, invert two (2); five (5) heat races, invert one (1).

2.6.3.1 Opening Night Redraw Mandatory: The redraw for all classes of cars is as follows: one (1) heat race, redraw five (5); two (2) heat races, redraw four (4); three (3) heat races, redraw three (3); four (4) heat races, redraw two (2); five (5) heat races, redraw one (1) per heat.

2.6.4 The driver must finish the heat race in order to be eligible for the invert. All cars that start but do not finish a heat race must be placed in the feature line-up behind all heat finishers. Drivers who did not start the heat race can be placed behind those who started but did not finish a heat, and any drivers disqualified from a heat race may be placed behind any heat race DNF cars.

2.6.5 In the event a driver does not participate in a B feature or feature event, that night will not count toward the driver's three-week point average. If this should occur at a track's opener or on the driver's first visit to the track, that driver shall be treated as a "new" driver the next time he races at that track and will be subject to the first time driver redraw policy (2.6.1D).

2.6.6 **Special Events** Special events shall be defined as any event not held on a track's regular night, or an event held on two days including the track's regular night. Any event held after the first Tuesday after Labor Day shall also be considered a special event.

2.7 GOOD STANDING

You must be in good standing with the WISSOTA Promoters Association in order to receive any point fund money and/or other awards. All fines must be paid, all suspensions must be fully served and all outstanding debts to WISSOTA must be fully paid in order to be considered to be in good standing with WISSOTA. WISSOTA reserves the right to offset the amount of any outstanding fine or other monies due to WISSOTA from a participant against any point fund money or other award to which the participant may be entitled. This includes any participants who have fines, suspensions or debts pending with WISSOTA.

2.8 RACING SEASON

The WISSOTA point season will begin the week of April 1st, and will end for the local/track point standings on the first Tuesday after Labor Day. The WISSOTA National point season will end after the sixth Sunday past Labor Day.

2.9 RACE CAR NUMBERS/LETTERS

Drivers are responsible for notifying WISSOTA of their current car number or number changes. Numbers/letters must be at least eighteen (18) inches high, must be in a contrasting color to the background color, and must be neatly displayed on both sides of the car and on the roof facing the grandstand. Reflective, mirror-like, or prismatic numbers, and hard-to-see car colors such as black, navy, maroon and brown, are strongly discouraged, and any competitor using such numbers risks not being scored properly at individual tracks. Driver assumes all risk for readability of his or her numbers.

2.10 POST-RACE SCALING

In all classes, <u>a minimum of the top three</u> (3) race cars in each qualifying race and a <u>minimum of the top five</u> (5) race cars in their feature race must scale. Any driver required to scale, immediately following the qualifying and/or feature events, who:

A. Does not go directly to the scales, or

B. Avoids going to the scales, or

C. Does not remain at the scales until scaled, or

D. Does not meet the minimum weight for the class, according to the scale at the race track for the event,

THEN: If in the heat race, shall be disqualified from the heat race and shall forfeit all points as well as all prize money for the heat race, but shall be allowed to start at the back of the last chance, consolation or feature race. If in the feature race, shall be disqualified and shall forfeit all points as well as all prize money for the feature, but may still be subject to the claim rule, if applicable.

2.11 INSPECTIONS

2.11.1 Timing and Scope of Inspection All race cars competing in WISSOTA sanctioned racing events are subject to inspection by WISSOTA, or track officials, at any time, and to any extent or degree, as determined by WISSOTA, or track officials, in their sole discretion. The decisions by WISSOTA, or track officials, regarding the specific race cars to be inspected, and the timing, scope or extent of any inspection, are final, binding and non-appealable, except as provided in Paragraph 1.8.

2.11.2 Types of Inspection

2.11.2.1 Minimum Specifications Inspection An inspection, usually conducted at the beginning of a racing season or a racing event, to determine whether a race car complies with the minimum applicable chassis and body specifications and all safety requirements. Any deficiencies or rule violations discovered must be corrected before the race car will be allowed to compete in the racing event.

2.11.2.2 Pre-Race Inspection An inspection, conducted in advance of a racing event, including a minimum specifications inspection, to determine whether a race car complies with applicable chassis and body specifications, safety requirements and any other rules or specifications, in the discretion of the track officials. Any deficiencies or rule violations discovered must be corrected before the race car will be allowed to compete in the racing event.

2.11.2.3 Post Race Inspection An inspection, conducted after a racing event, to determine whether a race car complies with all of the applicable rules and specifications, for that class of race car, with the scope and extent of the particular items to be inspected to be determined by WISSOTA, or the track officials, in their sole discretion.

2.11.3 Effect of Prior Inspection The fact that a race car has passed a minimum specifications inspection, a pre-race inspection or any inspection at another race track or event, is no guarantee or assurance that the race car will pass a post-race inspection.

2.11.4 Cooperation of Driver In connection with any type of inspection, the driver must cooperate with WISSOTA, or track officials, to enable track officials to conduct or complete an inspection, including removing or disassembling various parts or components. The driver and tech official are both required to sign WISSOTA's tech form.

2.11.5 Refusal or Termination of Inspection

2.11.5.1 Any driver who refuses to allow a pre-race or a minimum specification inspection to be conducted will not be allowed to compete in the racing event.

2.11.5.2 Any driver who refuses to allow a post-race inspection, or who terminates an inspection in progress, shall be fined $1,000.00, suspended for thirty (30) days, lose all points (both national and track points) and forfeit all money and awards for that event.

2.11.5.3 All WISSOTA classes maybe asked to take intake manifold off for inspection.

SECTION 3 - MINIMUM SPECIFICATIONS

3.1 GENERAL

3.1.1 At any time, before, during or after an event, WISSOTA or track officials may require additional measures or equipment, or make additional determinations, as they deem necessary to further reduce the risk to competitors.

3.1.2 All cars are subject to a minimum specification inspection at any time and a refusal of such inspection is subject to Rule 2.11. It is the responsibility of the driver to prepare his/her car to comply with all minimum specifications, to be free of defects, and in safe racing condition. Super Stock, Midwest Mod, Street Stock carburetor booster location will be measured using the Holley 4412-500 2 barrel booster location gauge. Gauge used can be purchased through TECH CHEC along with other carburetor tools.

3.2 DISPLAY OF WISSOTA AND SPONSOR LOGOS

3.2.1 Drivers must support any and all official WISSOTA sponsors by displaying both WISSOTA patches and sponsor patches on the front of the uniform, somewhere below shoulders and above the belt line, or on the front/side of arm above the elbow. The required patches include WISSOTA, title sponsor and Hoosier.

3.2.2 Mandatory decal locations. The WISSOTA title sponsor (on top) & Hoosier Tire decals must be located on the upper corner on the front fender, directly behind the wheel opening on all Hornets, Pure Stocks, Street Stocks, Super Stocks and Late Models. The same decals must be located in the upper left corner of the left door and the upper right corner of the right door on all Mod Fours, Midwest Mods and Modifieds. All other required decals must be placed on the outside of the body panels or the sail panels, in the upright position using the correct colors and sizes. Required decals are not allowed on the side of nose piece, or the frame rails, side engine enclosure, roll bars, ground effects, wheels or tires. All decals may be incorporated into a graphic wrap provided you use the correct color and size (you may download file from the WISSOTA website).

3.2.3 Failure to display the required patches or decals, as set forth above, will result in loss of all points (both track and national) where the infraction occurred and forfeiture of all money and awards for that event.

3.3 SAFETY/OTHER

3.3.1 Helmets All helmets must be rated SNELL SA2010 or SFI 31.1/2010 or newer. Manufacturer tag and SNELL/SFI sticker must not be removed. No SNELL KA or M rated helmets are allowed. Helmet must be worn at all times when the car is on the track and must accompany the vehicle at time of inspection. The helmet must have a face shield or eyewear protection, which must be in place while the car is on the track. A full-face helmet is strongly recommended. Head and neck restraint is strongly recommended.

3.3.2 Driving Suit A driving suit and gloves of a flame-retardant nature must be worn by all competitors; they are both mandatory. If the driving suit is a two-piece suit, both the top and the bottom must be worn at the same time. It is recommended that there be a one-piece, minimum three-layer quilted suit of fire resistant material and under-wear, socks, shoes and hood of fire resistant material. No flammable clothing/material may be worn outside of the firesuit.

3.3.3 Exhaust System Exhaust systems must be mounted in such a way as to

direct spent gases away from the cockpit area of the vehicle and away from areas of possible fuel spillage. Car number must be present on the last piece of the exhaust. It is recommended that all pieces of exhaust be welded all the way around. Exhaust must be sealed off with metal, not exhaust wrap, from driver compartment including footwell areas in all classes.

3.3.4 Exhaust Noise Suppression All cars must use a manufactured muffler on the exhaust system. The mufflers must be manufactured by a company that is established as a manufacturer of noise suppression equipment (mufflers). A turn down will not be considered a muffler, nor will any tube added to the end of the header merely to change the direction of the exhaust and sound emitted. This rule does not allow the use of a muffler that is built by a chassis builder, engine builder or your local fabrication shop, or any non-recognized manufacturer of mufflers. Mufflers must meet all manufacturer specifications and cannot be altered in any way.

3.3.5 Fuel/Fuel Cell Safety-approved fuel cells are mandatory. Fuel cells must be enclosed in a metal case of 20-gauge steel or 16 gauge aluminum. All fuel cells must be mounted no further forward than the center of the rearend, and must be between the frame rails. The fuel cell overflow hose must go to the bottom of the cell on the outside and must be fastened at the bottom of the cell, or a ball check valve must be used. All fuel cells must have a minimum of two (2) 2-inch X 1/8-inch metal straps or equivalent metal surrounding the fuel cell. Late Model fuel cells may not exceed 32 gallons. It is recommended that you use the smallest fuel cell possible.

3.3.5.1 Penalty for illegal fuel (all classes): $200 fine, 30 day suspension, loss of all track and national points and one year probation. Driver can continue to race until test results come back. Driver can use the WISSOTA double fine option if he/she desires.

3.3.5.2 Fuel Protest Procedure: A driver may protest another driver's fuel for $150 fee. The protest must be made prior to the start of the feature race, and the protesting driver must start the feature race.

3.3.6 Batteries Only one battery may be used in each car; this applies to all divisions. Batteries must be securely mounted and shielded. Batteries mounted inside the vehicle must be in marine-type cases. Positive battery terminal must be covered with plastic or rubber.

3.3.7 Loose Objects Loose objects, including weights, will not be allowed above the interior tin or deck or in the driver's compartment. Any weight added to other areas of the vehicle must be securely mounted using a minimum of two (2) 1/2-inch bolts through the weights. Weights must be mounted to the frame/cage only. Weight cannot move while race car is in motion or on track. Weights must be painted white and have your car number painted on them. If for any reason a weight falls off, the car will be disqualified for that race. If for any reason a muffler falls off, the car will be disqualified for that race.

3.3.8 Shoulder Harness, Belts, Restraints & Nets A competition shoulder harness, at least three (3) inches wide, and a lap belt at least three (3) inches wide are required. Month, year and date of manufacture must be on all belts. No OEM factory-type shoulder belts or straps will be allowed. Metal-to-metal buckles are required on the shoulder harness and the lap belt. The harness must be mounted in at least FIVE (5) points below the driver's shoulders (substrap).

Window nets with a quick release type latch at the top are mandatory in all classes. No homemade window nets, no banner nets or V-shaped nets, and no Y-belts allowed. As a matter of safety and vision, drivers are not allowed to mount anything that covers more than the top four (4) inches of the driver's window or the net (examples include but are not limited to tape, plastic, metal). Roll bar padding, neck braces, and/or head and neck restraints are highly recommended. Belts and harness cannot be over three (3) years old (by year and month or manufacturer's recommendation). When using a Hans or DeFender type head and neck restraint, you may use an SFI approved 2 inch belt system. These belts may only be used when using the head and neck restraint device.

3.3.9 Fire Suppression Onboard fire suppression system is strongly recommended.

3.3.10 Driver's Seat A full containment seat is strongly recommended.

3.3.11 Kill Switch A kill switch is required and must be within easy reach of the driver with the shoulder harness and lap belt fully cinched. This kill switch must be clearly marked "off" and "on."

3.3.12 Drive Shaft Hoops Driveshaft hoops are required and must be constructed of at least the equivalent of 1/4-inch by 2-inch steel and must be mounted in such a manner as to contain the drive shaft in case of breakage. The drive shaft MUST be painted white. For Late Models an explosion-proof steel bell housing is recommended.

3.3.13 Mirrors and Radio No mirrors are allowed in car at any time. The only radio or communication device allowed in any race car is a <u>single</u> Raceceiver unit which allows track officials to communicate with drivers.

3.3.14 Steering Wheel It is mandatory that all cars be equipped with a quick-disconnect steering wheel.

3.3.15 Brakes All cars must have brakes on all four (4) wheels (not applicable to Mod Fours without dual master cylinders). Cars must be able to lock up all brakes for inspection. No carbon fiber brakes allowed, no titanium or exotic materials brakes allowed other than aluminum brake calipers in the Late Models.

3.3.16 Tire Availability Disclaimer - ATTENTION DRIVERS: Be advised that not all race tracks have tire vendors with large supplies of the various tire sizes. It is each driver's responsibility to inventory the tires he/she needs.

3.3.17 Traction Control Devices – Electro-mechanical, computer-controlled or electronic traction control devices of any type or kind are not allowed in any WISSOTA class. Penalty will consist of a five thousand ($5,000.00) fine, a one (1) year suspension, and loss of all points (both track and national). Parts will be confiscated and sent for testing. Driver will be allowed to continue racing until test results are received by WISSOTA.

3.3.18 Adjustable Timing Controls - Adjustable timing controls will not be permitted within driver's reach. Retarded or ignition delays will not be permitted within driver's reach. RPM limiters will not be permitted within driver's reach. Distributors must be mounted in original mounting positions for the make and model of engine being used. <u>If your race car is equipped with a switching device that controls ignition trigger input to the ingnition box, ONLY one input circuit can be utilized in competition. Any other circuitry must be unhooked and not connected to any switches</u>.

3.3.18 Remote or External Canister Type Shocks are not allowed in any WISSOTA class except WISSOTA Late Models.

3.3.18 Composite Or Exotic Materials Intake Manifolds are not allowed in any WISSOTA division. Intakes must be made of either steel or aluminum, as described in each division's rules in this book.

3.3.20 In-Car Cameras/Lights, video cameras and/or recording devices are not allowed anywhere on any race car, in any class, other than in the cockpit above the interior deck tin. No lights, LED lights, or any other illuminating devices allowed to be turned on under any race cars while racing.

3.3.21 Cylinder Head Valve Jobs. In all competition valve jobs, all cuts must be concentric to the valve guide.

3.3.22 Transponders. The following mounting locations are now mandatory for every competitor who mounts a transponder to be run at a WISSOTA facility. Late Models, Modifieds, Super Stocks, Midwest Modifieds, Mod Fours: mount the transponder on the right side of the midplate on the back side; you must make sure there is a direct signal to the ground with no object between transponder and track surface. Pure Stocks and Street Stocks: Mount the transponder on the right side, inside the frame, approximately 21-23 inches behind the lower ball joint. Hornets, transponder must be mounted approx. 34 inches behind the center of lower ball joint on the right hand side of car; cut a hole in the floor pan and bolt or weld a mount to the top side of the floor pan and mount transponder to it, making sure there is no obstruction between transponder and the ground. You must have your transponders mounted as described above for your class. If you have a transponder mounted in any location other than described above at a track where transponder scoring is used, you will be disqualified from that race if discovered through post-race inspection.

3.3.23 Louvers or holes on the deck and on the back of the car or sides of the car are considered ground effects, and ground effects are not allowed. You may have louvers, holes or 2 inch high scoop over oil cooler or tranny cooler. Louvers, holes or scoop cannot be any bigger than the coolers.

3.3.24 Travel Limit Chain in Super Stocks, Midwest Mods, Street Stocks and Mod Fours cannot be tight with more than half inch of travel left of shock absorber; absolutely no biscuits or springs allowed on chains. Chains can be taped, but must be able to identify chain links through tape. Cable or nylon strap may be used instead of chain.

3.3.25 Fuel Pressure Regulator is allowed in all classes.

3.3.26 Exotic Materials No exotic materials, including tungsten, are allowed on any race car unless a rule specifically allows that material. A carbon fiber air cleaner housing is allowed.

3.3.26 Electronic Components No electronic components are allowed in or on a race car or driver except those specifically allowed by WISSOTA and/or track. No computerized dash instrumentation is allowed. Raceceiver, transponder, GoPro camera or other similar recording devices are allowed when mounted as per WISSOTA rules.

3.3.26.1 Shocks No electronically adjustable shocks are allowed. Maximum shock shaft outside diameter is 16mm (.629") for any shock on car. No air springs are allowed. One coil spring is required on each corner of the car. Bump sticks are not allowed in any WISSOTA class.

3.3.26.2 Timing Control No programmable timing control in ignition control/ignition box. No electronically controlled timing curves other than the Late Model GM CT525. WISSOTA and/or official from any WISSOTA

track may confiscate and send in to manufacturer any ignition/ignition controller to make sure it has not been altered and complies with class rules. No ignition retarder other than starting retard.

3.3.27 Composite Material Hoods In the Modified, Super Stock, Midwest Mod and Mod Four classes, hoods must be aluminum and cannot be made of a composite or exotic material. Hood scoop can be made of composite material. Late Models can have composite hoods and nose filler piece.

3.3.28 Carburetors No floatless carburetors allowed in any class. No dimpling of material around carburetor venturis. Venturis must all be consistent. No plastic, phenolic, resin or any other exotic materials carburetors allowed in any class. No spacers of any kind between carburetor base plate and carburetor main body.

3.3.29 Spoilers The trailing edge of all spoilers must be turned down a minimum of 30 degrees so it is below the top of the spoiler.

3.3.30 Tire & Wheel Monitors No tire air pressure monitors, tire temperature monitors, wheel spin monitors, or any other device that monitors tire or wheel performance or characteristics may be mounted to any part of the race car, wheels or tires, including the valve stem. No air bleeder valves of any kind are permitted on any wheels.

3.3.31 Axles No torsion rear axles. Axles must be same outside diameter side-to-side.

3.3.32 Car Covers No car covers allowed anywhere on the race car outside pit stall.

3.3.33 Radiator Radiator(s) must be mounted in front of engine in all classes.

3.3.34 Wheel Covers No wheel covers allowed on left side of any cars.

3.3.35 Gas Lines Gas lines in cockpit/driver's compartment must be made of steel.

SECTION 4 - POINT SYSTEM

4.1 POINT SYSTEM

Points will be awarded at all WISSOTA sanctioned events on the following basis:

4.1.1 General Points go to the driver. The driver will receive feature points only, or B-feature points if unable to qualify for the feature. All drivers that fail to start or qualify for the main event are awarded 45 event points. If you do not compete in a heat or B feature you will not receive the 45 event points.

4.1.2 Eligibility for Points If a race car pulls out onto the race track at the beginning of the race, under its own power, with the intent to race, then the driver will receive the points for the finish in that race.

4.1.3 Show Points All drivers in each class participating in the race events at a track will receive show points based upon the number of cars participating in that class, as follows:

4.1.3.1 1 to 9 cars participating, ten (10) show points.

4.1.3.2 10 to 15 cars participating, eleven (11) show points.

4.1.3.3 16 or more cars participating, twelve (12) show points. Participating means that a car must take a green flag at some time during the racing program, including hot laps.

4.1.3.4 DNF (did not finish). Points awarded to DNF cars based on the order in which they were lined up at the start of the race (1st lap) or number of laps completed. Any car judged to be at fault for restart/accident will be scored behind any others who completed the same number of laps or were involved in the same incident.

4.1.4 Heat Races

No points will be awarded for heat races.

4.1.5 Consolation Races/B Features

All drivers who fail to qualify for the feature event will receive 45 points.

4.1.6 Feature Races

Pos.	Points						
1st	100	7th	78	13th	66	19th	54
2nd	95	8th	76	14th	64	20th	52
3rd	91	9th	74	15th	62	21st	51
4th	87	10th	72	16th	60	22nd	50
5th	84	11th	70	17th	58	23rd	49
6th	81	12th	68	18th	56	24th	48

If starting more than 24 cars: 25th: 47 pts, 26th: 46 pts, 27th Back: 45 pts

4.1.7 NATIONAL POINTS

In the Late Model, Modified, Super Stock, Midwest Mod, and Street Stock classes, a driver's top 30 shows/races will be used to determine national points. For Mod Fours, Pure Stocks and Hornets, the top 20 shows will determine national points. If a tie occurs for the national championship, it will be broken by the number of 112 point shows, 111 point shows and then 110 point shows. If the tie is not broken by that method, it shall remain a tie. Tiebreakers will not be used for any other positions in the point standings.

4.1.8 STATE POINTS

A driver's top 20 shows will be used to determine any state champion awards that may be provided by WISSOTA. The state raced in, not lived in, will determine where points are given. The provinces of Canada will be grouped & considered as one state. State points will be awarded only through the first Tuesday after Labor Day each year. After that date, only national & rookie points are awarded.

4.1.9 ROOKIE STATUS

WISSOTA shall recognize a "Rookie of the Year" in each division each year. To be eligible for the Rookie of the Year award, the driver must clearly identify himself or herself as a rookie in his/her respective division by checking the appropriate box on the WISSOTA Competitors License Application. If this box is not checked on the original license application form, the driver will not be eligible for "rookie" status. To have rookie status in any class, a driver must not have competed in more than five (5) events in that class, or any higher class, at any track or under any sanction, in any previous years (cumulative). Rookie points will be awarded through the end of the WISSOTA racing season.

4.1.9.1 The order of classes, from highest to lowest, used to determine rookie status is as follows: Late Model, Modified, Super Stock, Midwest Modified, Street Stock, Mod Four, Pure Stock, Hornet. There are no lateral moves from class to class, only moves to higher or lower classes.

4.1.9.2 If the driver meets all of the above criteria, an asterisk (R) will appear next to his or her name in the national point standings published regulary in All The Dirt! as well as on the WISSOTA website, www.wissota.org.

4.1.9.3 If a WISSOTA official at any time determines that a driver who has applied for rookie status does not meet the criteria listed above, that

driver's eligibility for the Rookie of the Year award will be revoked.

SECTION 5 – ENGINE PROTEST RULE

5.1 APPLICATION
The engine protest rule is applicable to all WISSOTA classes at all WISSOTA sanctioned track openers, regular weekly shows and specials.

5.2 RACE CARS SUBJECT TO BEING PROTESTED
All race cars competing in the feature event.

5.3 RACE CARS ELIGIBLE TO PROTEST
Any race cars competing in the feature event, which:

5.3.1 Have a driver who possesses a full WISSOTA driver's license for that feature class of cars.

5.3.2 Have a driver who executes a protest with a track tech official prior to the start of the feature race and has tendered the required class protest fee (cash only, US funds or equivalent).

5.4 RACE CARS NOT ELIGIBLE TO PROTEST

5.4.1 Those drivers possessing only a temporary license.

5.5 PROTEST FEE (CASH ONLY)

5.5.1 Late Model and Modified - $200. Super Stock, Street Stock, Midwest Mod Pure Stock, Mod Four, Hornet - $100 top end, $300 total engine teardown. Sealed crate engine protest fee is $700.

5.5.2 Disposition of protest fee: If, after tear down, the engine is found to be legal, the protest fee will be paid to the protested driver, less $25.00 which will be paid to the race track. If, after the tear down, the engine is found to be illegal, $75.00 of the protest fee will be returned to the protesting driver and $25.00 of the protest fee will be paid to the race track.

5.6 PROTEST PROCEDURE
After the feature race, a track official will notify the driver of the relevant race car that his race car has been protested. The protested driver shall then proceed directly to the area designated for inspection and tear down pursuant to a protest. After the inspection or tear down has begun, track officials will notify protested driver the name of the driver who posted the protest, if asked by the protested driver. Track officials will proceed, in accordance with the class of race car protested, to tear down the engine in the protested race car, as follows:

5.6.1 Late Model small cast-iron head engine – Upper end only. An upper end teardown includes, but is not limited to, the removal of the carburetor spacer plates or adapters, valve covers, intake manifold, header, valve train components, and a head. Heads must meet all specifications outlined under iron head rule.

5.6.2 Modified spec engine 0-362. Removal of carburetor, intake manifold, headers, heads and valve train components. At this time bore and stroke will be checked. Heads must meet all specifications outlined under iron head rules.

5.6.3 Super Stocks, Street Stocks, Midwest Modifieds and Pure Stocks - Top end only - Removal of necessary components to check bore, stroke, heads, piston deck height and also pull intake and exhaust valves to check seat cut and also check for any grinding. Also make sure lifter and lifter bore/size meets class rule. Lower end - Remove necessary components to check rods and crankshaft. On a complete engine tear down, a rod and piston must be removed and inspected also.

5.6.4 Mod Fours and Hornets – Removal of necessary components to tear down upper end and complete engine.

5.6.5 Late Model Spec Aluminum Head - Removal of necessary components to make sure heads meet all specifications outlined under the Spec Aluminum Head Rule.

5.6.6 GM Sealed Crate 602, 604, CT525 Engine Protest - Protest fee is $700.00. WISSOTA will take the engine to a certified GM sealed crate repair shop of WISSOTA's choice. A portion of the $700.00 protest fee will be used to pay the repair shop to take the engine apart to check for legality. The remainder of the protest fee will go to the protested driver if engine is determined to be legal. If engine is determined to be illegal, the remainder of the protest fee will be returned to protester. Driver will be allowed to continue to race until legality of engine is determined.

5.7 SPECIAL PROVISIONS RELATING TO PROTESTS

5.7.1 Only the driver may protest.

5.7.2 A driver may only protest one engine per race.

5.7.3 Only the tech inspector has the final word on the legality of the race cars involved in a protest.

5.7.4 No person shall prevent or interfere with the protest procedure.

5.8 PENALTIES OR SANCTIONS RELATED TO PROTESTS

5.8.1 If any engine parts are found to be illegal, the provisions of Rule 1.16 regarding illegal parts, and Rule 1.18 regarding confiscation of illegal parts, shall apply.

5.8.2 Withdrawal of protest If a driver declares an intent to protest, and tenders the required protest fee, and then the driver changes his/her mind and with draws the protest, then the driver will forfeit all money and awards for the event and shall also lose all points earned to date (both national and track points at the track where the infraction occurred).

5.8.3 Refusal of Protest A driver who refuses to allow an inspection/tear down pursuant to a protest shall be subject to the following penalties:

5.8.3.1 First Refusal Upon first refusal to allow an inspection/tear down pursuant to a protest, driver forfeits all cash and all contingency winnings for the event, any trophies earned in the feature, plus loss of all points earned to date (both national and track points), plus the driver shall be fined $1,000.00 and suspended for thirty (30) days.

5.8.3.2 Second Refusal Upon second refusal, driver forfeits all cash and all contingency winnings for the event, any trophies earned in the event, and loss of all points earned to date (both national and track points). In addition, driver shall be fined $2,500.00 and suspended for one (1) calendar year from date of the infraction.

SECTION 6 - ENGINE PUMPING RULE

6.1 APPLICATION

This engine-pumping rule is applicable for all WISSOTA classes at all WISSOTA-sanctioned track openers, regular weekly shows and specials.

6.2 RACE CARS SUBJECT TO BEING PUMPED

Any race car finishing in the feature event, whether running or not, and regardless of whether otherwise disqualified is subject to being pumped. This usually will include, but is not limited to, pumping the top three (3) finishers in the feature race, plus one

other feature finisher drawn from positions 1-10.

6.3 PUMPING PROCEDURE

After the feature race, a track official will notify the drivers of the relevant race cars that their race cars are to be pumped. The drivers of the race cars to be pumped shall then proceed directly to the area designated for inspection and tear down. The track officials will then proceed with the pumping as follows:

6.3.1 The track official will advise the driver which cylinder will be pumped.

6.3.2 The selected cylinder will be pumped, using the appropriate P&G gauge, in accordance with the manufacturer's instructions.

6.3.3 The reading obtained will be multiplied by eight (8), (four(4) on four cylinder engines), to get the total cubic inches of the engine.

6.3.4 The exhaust port size will also be checked, which will include the removal of the header. (This does not apply to open Late Model engines and non-spec Modified engines.)

6.4 PENALTY OR SANCTIONS RELATING TO PUMPING

6.4.1 If the engine is found to exceed the cubic inch limits for the class, the provisions of Rule 1.16 regarding illegal parts, and Rule 1.18 regarding confiscation of illegal parts, shall apply.

6.4.2 **Refusal to be Pumped** A driver who refuses to be pumped shall be subject to the same penalties as a refusal of a post race inspection under paragraph 2.11.5.2.

2020 WISSOTA LATE MODEL RULES

Revised 11-19

NOTICE: PLEASE NOTE THAT THIS CLASS IS ALSO REQUIRED TO COMPLY WITH ALL WISSOTA RULES SET FORTH IN:

SECTION 1 .....GENERAL RULES
SECTION 2 .....GENERAL POLICIES
SECTION 3 .....MINIMUM SPECIFICATIONS
SECTION 4 .....POINT SYSTEM
SECTION 6 .....ENGINE PROTEST RULE
SECTION 7 .....ENGINE PUMPING RULE

IN FRONT OF THIS RULE BOOK.

[1] ROLL CAGE

A. Car must have rear bump bar (braces .095 tubing) and must be at least one (1) inch below the cell.
B. Full roll cage required with minimum of 1.5-inch O.D., .095 mild steel tubing or .062 chrome moly tubing, with three [3] bars in left hand door excluding frame (a fourth door bar is strongly recommended) plus two bars in right side of door excluding frame. Any roll cage determined by WISSOTA to be unsafe may be disqualified.
C. Screen or bars must be in front of driver.
D. Rear bumper tubing must make a complete loop back to the frame. Bumper may be cut off 2 inches maximum outside of frame rails. Car must have a mandatory fuel cell nerf bar/bumper, located a maximum of 14" off the ground, which protects the rear of the fuel cell.
E. Driver side intrusion plate is mandatory, minimum of 1/8" thick, 16" high and 26" long and made of magnetic steel. Must be welded, bolted or clamped on.

[2] BODY SPECIFICATIONS

Refer to diagrams for measurements on Late Model bodies.

A. Eligible Models

1. This division is limited to 1980 through current model year American-manufactured stock car bodies. Toyota Camry body is also legal.
2. Late Model stock cars must have type of car displayed on body with 3" minimum letters. Examples: Camaro, T-Bird, Probe, Grand Prix, Camry, etc.

B. Body Panels

1. Standard dirt style bodies are required. A stock-appearing Monte Carlo, Mustang, Grand Prix, Taurus, etc. style nose is required. Roof posts/rear sail panels can have a maximum of 2 inch outward bow from top to bottom. Roof posts/sail panels can have 2" max. height at center and taper down to 0" at top and bottom. Front of sail panels/roof posts can go no further forward than the back of driver's seat at shoulder height. Aftermarket plastic manufactured molded roofs and rear roof posts/sail panels are allowed as long as they meet the class' roof, rear roof post/sail panel dimensions.
2. No "wedge" style bodies. No roof-mounted spoilers or wings.
3. No lips allowed, anywhere on the nose, body or roof.
4. All cars must have a minimum of a 1 inch roll at the top of the fenders, doors, and quarter panels; a sharp edge will not be allowed. Body roll must go from sides over upper body, and not upper body over sides. A single strip affixed to the edge of the body, and riveted, both on the side and the top, will not be permitted. The body line must be a smooth even line from front to rear.
5. No mirrors.
6. No part of deck lid may extend beyond the quarter panels at the rear. Maximum height of body – fenders, doors, deck lid, etc., at any point, from the ground, will be

DIAGRAM LM-1

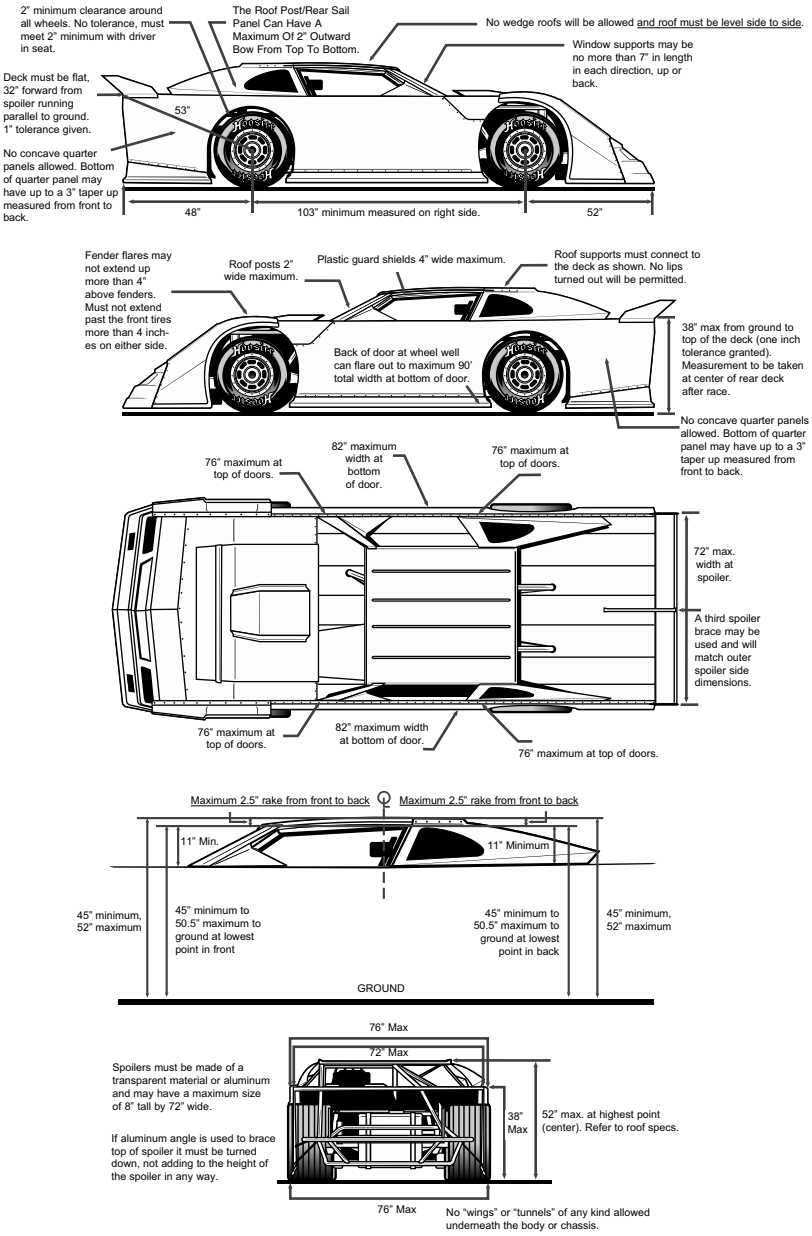
2" minimum clearance around all wheels. No tolerance, must meet 2" minimum with driver in seat.
The Roof Post/Rear Sail Panel Can Have A Maximum Of 2" Outward Bow From Top To Bottom.
No wedge roofs will be allowed and roof must be level side to side.
Window supports may be no more than 7" in length in each direction, up or back.
Deck must be flat, 32" forward from spoiler running parallel to ground. 1" tolerance given.
53"
No concave quarter panels allowed. Bottom of quarter panel may have up to a 3" taper up measured from front to back.
48"
103" minimum measured on right side.
52"
Fender flares may not extend up more than 4" above fenders. Must not extend past the front tires more than 4 inches on either side.
Roof posts 2" wide maximum.
Plastic guard shields 4" wide maximum.
Roof supports must connect to the deck as shown. No lips turned out will be permitted.
38" max from ground to top of the deck (one inch tolerance granted). Measurement to be taken at center of rear deck after race.
Back of door at wheel well can flare out to maximum 90' total width at bottom of door.
No concave quarter panels allowed. Bottom of quarter panel may have up to a 3" taper up measured from front to back.
76" maximum at top of doors.
82" maximum width at bottom of door.
76" maximum at top of doors.
72" max. width at spoiler.
A third spoiler brace may be used and will match outer spoiler side dimensions.
76" maximum at top of doors.
82" maximum width at bottom of door.
76" maximum at top of doors.
Maximum 2.5" rake from front to back
Maximum 2.5" rake from front to back
11" Min.
11" Minimum
45" minimum, 52" maximum
45" minimum to 50.5" maximum to ground at lowest point in front
45" minimum to 50.5" maximum to ground at lowest point in back
45" minimum, 52" maximum
GROUND
76" Max
72" Max
Spoilers must be made of a transparent material or aluminum and may have a maximum size of 8" tall by 72" wide.
If aluminum angle is used to brace top of spoiler it must be turned down, not adding to the height of the spoiler in any way.
38" Max
52" max. at highest point (center). Refer to roof specs.
76" Max
No "wings" or "tunnels" of any kind allowed underneath the body or chassis.

38 inches with 1" tolerance after the race, measured at the center of the deck from left to right.

7. All cars must have a complete body, including quarter panels on both sides of car. The leading edge of quarter panels must have the same measurement from top to bottom as the door panels; however, the quarter panel may be tapered toward the rear of the car up to 3" when measured from front to back.
8. No concave body parts.
9. The right side body line must be straight from front to rear with a one inch tolerance up and down, left and right.

C. Interiors

1. The interior bodywork of the car may be dropped to a maximum of four (4) inches below the top of the doors, and must be a minimum of 11 inches below roll cage.
2. If a dropped interior is used, the interior panel must fasten flush at the top of the doors, and must taper gradually towards the center of the car, without creating any lips. The minimum taper allowed will be eight (8) inches.
3. If a dropped interior is used, it must taper up, in a straight line, to the quarter-panel height and be flat and level for a minimum of 32 inches to the end of the rear deck lid/quarter-panel/spoiler. Dropped interior may begin no further forward than the firewall, which in turn may be no further forward than the engine plate. At the firewall, across the center of the car, the vertical drop to the interior of the car may be a maximum of four (4) inches.
4. If interior is flat throughout car, it must maintain a minimum clearance of 11 inches from the roll cage, to allow for easy exit.
5. If interior is flat, the panel must run in a straight line from immediately behind the driver's seat to the base of the spoiler/rear of deck lid.
6. Interior panels must at no point in the car be over 3" in height. The portion of the panel running beside the driver must taper to zero inches at the rear of the cockpit.

D. Nosepieces

1. Nose side extensions must be flexible, and may not extend outside front tires with wheels pointing straight ahead. Nose side extensions are not to flare out or up. They cannot alter original shape of nosepiece, and must be braced with collapsible supports. No steel supports.
2. Stock appearing nose must be made of molded type of material. Material may not be removed from nose piece. No cutting from top or sides.
3. Two-piece nose must be fastened together without any spacers to increase width.
4. Stock nosepiece may extend to a maximum of 52 inches from center of front hub furthest point forward, and the bottom of nosepiece must be mounted parallel to the ground (not tilted back in any way).
5. Tow hooks are strongly recommended, whatever style of nosepiece is used.
6. Fender flares may not extend up more than 4 inches above fenders. Maximum width at fender flares is 90 inches. Nosepiece flares must be made out of flexible materials and must not extend past the front tires more than 4 inches on either side.

E. Front Fenders and Hoods

1. Hood can drop one inch with a one inch tolerance measured at the back edge of the hood and in front of the carburetor from left to right side of the car. Fenders must taper from outer edge to hood in a straight line. Fender materials must be flat with no bubble. Fender top must have 10" minimum width.
2. Hood must be removable from the car for technical inspection.

F. Doors

1. Top of doors, on both sides, can be no higher than 38 inches from ground, when measured at the steering wheel, with a maximum depth of 35 inches including any skirts or body extensions.
2. At no point may doors break in towards center of car. No concave doors.

G. Roofs

1. Roof must be stock appearing and level, and must run parallel to body (see drawing). Roof posts/supports are mandatory. All posts must go from roof edge to outside edge of body on both sides. Roof bead rolls/fins/supports cannot be more than 3/4" high off the flat of the roof with a maximum of five per roof.
2. If body style has rear roof supports that have windows, window openings may be filled with clear Lexan or left open. If Lexan is used, both roof post openings must be filled. Decal package may be used for window.
3. Both rear roof supports must be of the same size, shape and material. No lips along rear edge for roof supports will be allowed. If a break is used for support, it may be a maximum of 1 inch and must be turned toward the interior of the car. Both rear roof supports must be attached to the body and roof at the same point on both sides of the car. Rear roof post/rear sail panel can have a maximum of 2" outward bow from top to bottom. The rear roof posts and spoiler support(s) must have a minimum of 3" between roof post and spoiler support(s) at deck.
4. Front posts must be flat and of uniform width from top to bottom – 2-inch maximum, with a 1-inch break at top and bottom.
5. Minimum roof size will be 44" long by 48" wide. Maximum roof size will be 54" long by 52" wide. No odd shape, partial or tilted roofs (see diagram). Back of roof can be curved forward a maximum of two (2) inches.
6. A maximum 1.5 inch roll turned under is allowed along the front and rear edge of the roof for support.
7. Any sun/antiglare shields (maximum 4 inches deep) must be hinged for easy exiting.
8. No lips of any kind may be attached to front, rear, or sides of roof or roof posts. For all roof sizes and roof support dimensions, please refer to the drawings.

H. Rear Quarter Panels

1. No offset quarter panels front to back. Rear quarter panel taper-in must start at center of rear hub.
2. Tire clearance from doors and quarter panels must be a minimum of 2 inches. Tire must be fully visible from the side. No wheel skirts.
3. At no point may quarter panels break in towards center of car. No dishing. Lips running vertical on rear edges will not be allowed.

I. Spoiler

1. Rear spoilers only. Must be securely attached to top edge at the rear, along entire width.
2. No adjustable spoilers allowed. Spoiler should be made from one piece of material, and not two pieces bolted together, except for spoilers that are shipped from manufacturers in 2 pieces, left and right. No spoiler, whether single piece or two-piece, can be installed so that it can slide to the left or the right. Spoiler may be hinged to rear body to allow for change in angle of deflection. No more than three spoiler supports may be used.
3. All two-piece spoilers must be bolted together so that both pieces are at the same angle of deflection.

LM SPOILER DIAGRAM

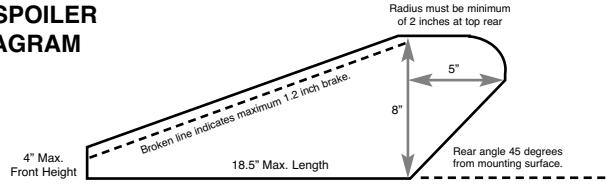

No more than 3 spoiler supports permitted (a 1" steel strap is not considered a spoiler brace). Front edge of spoiler support must be inline.

4. Spoilers must be made of either aluminum or Lexan, and be of adequate strength.
5. Spoilers may have a maximum size of eight (8) inch height, by 72" (seventy-two) width. Note: Gurney flaps and curls are allowed along the upper edge of the spoiler, but their length will be included in all measurements. Spoilers will be measured according to total length of and width of material, in any shape or form. If aluminum angle is used to brace upper edge of spoiler, it may not add to spoiler height or length in any way.

[3] CHASSIS AND WHEEL BASE

A. Wheel base must be a minimum of 103 inches and there will be no tolerances. The measurement will be taken from the center of the front hub to the center of the rear hub on the right side of the car.
B. No in-cockpit weight adjustment of any kind. No weight adjustments allowed within driver's reach. Remote or external canister type shocks allowed.
C. If found with any visual rule violation but allowed to run, infraction must be corrected before you race the next Late Model race.
D. A maximum of one stone deflector is permitted on right side frame rail. The deflector may be made of steel, aluminum or heavy gauge wire. Can run from rear motor mount to in front of four-bar brackets, not to cover the brackets, not to be above the top frame rail or below the bottom frame rail.

[4] SUSPENSION - FRONT AND REAR:

A. Shocks and springs
1. Shocks must be constructed of aluminum or steel but cannot be more than two-way adjustable. Canister shocks are permitted.
2. The only external connection allowed to the shock is a single hose to a single remote canister with the option of a compression adjuster in the canister.
3. Compression adjuster and/or canister cannot be mounted within the reach of driver.
4. No cross connected shocks are allowed.
5. No "Rod Through" designs are allowed. "Rod Through" shocks are defined as those shock absorbers in which the piston rod protrudes from both ends of the shock body.
6. No Inerters are allowed.
   A. No rotating parts inside the damper.
   B. No Inerter style dampers, either mechanical or hydraulic, or other type of primarily acceleration sensitive damping devices not permitted.
   C. No electrical adjusted or active dampers are allowed. No electrical wires, transmitting or receiving components will be allowed to be attached internally or externally to the dampers or mounted inside any component or dampers.
7. No portion of the racecar including and not limited to shocks and spring components or chassis components may have the ability to communicate transfer, transmit or receive any type of digital or analog data or any language and or adjust or monitor in any way whatsoever including but not limited to a variation of a wireless remote device/phone/computer/tablet/ipad or a mechanical remote device.
8. Any new chassis design or component designs pertaining to and/or but not limited to shock absorber mounts must be submitted to WISSOTA for approval before they will be permitted for use in competition. Manufacturer and/or competitor may be required to disassemble for complete inspection before installment of new part is permitted.
9. Springs must be made of steel. Torsion bars are not allowed in rear. Spring rubbers are allowed.
10. Coil springs must be steel. Leaf springs may be composite or steel.
11. Only one shock per wheel is permitted at the left front, right front, right rear corners.
12. Left rear must have one shock behind the axle tube and may have one traction (dummy) shock on the front side or top of axle tube. Must mount vertically to the birdcage or clamp bracket.
13. One 5th coil shock permitted.

14. One 90/10 optional shock may be mounted above lift arm on upper lift arm plates. Must be mounted towards the front of the car lying parallel with the car. Shock must mount within 3" of the centerline of the rear ends center section.
15. Drop chain (limiting chain) is permitted. Must mount vertically between frame and a clamp bracket.
16. Bump stops and/or bump springs are permitted.
17. Suspension covers are not allowed. Rear covers on racecar are not allowed outside of your pit area. Spring and/or shock covers are permitted, but must be fastened directly to the spring or shock.
20. A swing arm and/or Z-link suspension is permitted as long as the top and bottom solid links are mounted on hiems and run in the opposite directions of the bird cage. The shock on a swing arm or Z-link rear suspension may mount to the bird cage or the bottom radius rod.

B. New designs/products, materials, mounts:
1. Any new chassis design or component design and or technology pertaining to and/or containing suspension must be submitted to WISSOTA for approval before they will be permitted for use in competition. Manufacturer and/or competitor may be required to disassemble for complete inspection before installment of new part is permitted.
2. Suspension and/or rear end parts can be made of steel or aluminum. Aluminum mounting brackets are permitted.
3. Frame and/or suspension mounts must be welded or bolted solid to the frame and not move. ie floating, sliding, pivoting and/or rotating mounts and/or brackets of any sort are not allowed.
4. Bolted components must match the correct bolt size with the hole (for instance 3/8 bolts in a 1/2 inch hole will be deemed illegal) and they must be torqued to a min. of 40 ft. pounds per inch.

C. Rear Suspension Mounts
1. Single sheer mounts must be 1/4" minimum steel and/or 1/2" minimum aluminum.
2. Double sheer mounts must be 1/8" minimum steel and/or 1/4" minimum aluminum.
3. Sheer mounts must use minimum 5/8" rod ends with minimum 1/2" grade 8 bolts only.
4. Double sheer mount must be no wider than 4 inches with a minimum 1/2" inch grade 8 bolt with steel or aluminum spacers only.

D. Lift Arm & Pull Bar
1. Only one (1) mechanical traction device is permitted. Only one (1) pull bar or one (1) lift arm is permitted. No other options are allowed. Covers of any sort in any relation to the lift arm or pull bar are not allowed.
2. Floating, pivoting and/or rotating mounts and/or brackets of any sort (connected to and/or associated with the pull bar or lift arm) are not allowed.
3. Lift arm is defined as a steel or aluminum triangulated bar that is connected at the top and bottom of the rear end housing, extending forward where it is connected to a shock, shockspring coilover combination and a limiting chain. One stabilizer bar is permitted to locate the front of the lift arm from left to right in the car.
4. 6th coil or braking spring assemblies are permitted, must be in front of 5th coil shock.
5. Pull bar is defined as a continuous assembly that is connected to the top of the rear end andextends forward to a solid mounting point located on the chassis. The mounting location at both the front and rear of the pull bar may be adjustable but must remain constant during competition (cannot be adjustable from the cockpit).

E. Radius Rods
1. All rear suspension radius rods must be of a fixed length. No hydraulic cylinders, torsion bars, bump rods, spring rods, slider rods or shocktype radius rods permitted.
2. Radius Rods must be a minimum of 1" aluminum diameter OD or 7/8″ steel OD. Rods can be round, square, or hex shaped. Rods must be a minimum of .095 steel or .120 aluminum in tubing thickness.

3. Heim joints must be a minimum 5/8, and a maximum 3/4" steel heim. No rubber bushings.
4. Only two (2) radius rods per side.
   A. Radius rods must be spaced on the frame a minimum of 6".
   B. Radius rods must be spaced on the birdcage a minimum of 6" and a max. of 12".
   C. Measurements will be made from center of each radius rod bolt.

F. Birdcages
1. Birdcages may consist of multiple barrels but must bolt or weld together to work as single barrel birdcage.
2. Limited one birdcage (1) per side.
3. Shock(s) and radius rods must mount to the birdcage.
4. Floating, pivoting and/or rotating mounts and/or brackets of any sort are not allowed. All brackets or mounts attached to the birdcage must be bolted or welded solid.

G. Axle Housing & Rear Differential
1. The axle housing must be of the "closed tube" design utilizing "full floating" magnetic steel axle shafts.
2. The center section of the axle housing must be manufactured of either aluminum or magnesium.
3. Axle tubes must be one (1) piece. Axle tubes must be manufactured of aluminum or magnetic mild steel. Axle tubes manufactured of exotic, heavy materials will not be permitted. Maximum thickness of steel axle tube is .30". The outside diameter of the axle tubes must not exceed three (3) inches. Axle tube internal iinserts or external sleeves will not be permitted. The addition of any ballast weight to the axle housing will not be permitted.

H. Axle Housing Mounts
1. The only materials used to fabricate axle housing mounts (birdcages) that will be permitted are aluminum or magnetic mild steel. Axle housing mounts fabricated of exotic, heavy materials will not be permitted.
2. When fabricating axle housing mounts, detail must be paid to functionality. The completed axle housing mounts, when comparing the right and the left side, must be as similar in design as possible.

I. Rear Suspension Attaching (Radius) Rods
1. The only materials used to fabricate attaching (radius) rods that will be permitted are magnetic steel or aluminum.
2. Aluminum attaching (radius) rods may be solid or tubular material. Magnetic steel attaching (radius) rods must be tubular with a maximum wall thickness of 3/16 inch.

J. Brakes, Brake Components, Wheel Hub
1. Brake Calipers must be manufactured of aluminum.
2. The brake caliper including brake caliper pistons must be used as producted by the brake caliper manufacturer.
3. Brake Rotors must be manufactured of magnetic or stainless steel.
4. Brake rotors must be used as produced by the brake rotor manufacturer.
5. Wheel hubs must be manufactured of aluminum of magnesium.
6. Wheel hubs must be used as produced by wheel hub manufacturer.
7. The combined weight of the wheel hub, wheel bearings and seal, spindle nut and washers, brake rotor and attaching hardware, the axle cap, and the wheel spacer must not exceed 27 pounds.

K. Wheel, Wheel Discs, Wheel Spacers
1. Only aluminum wheels will be permitted.
2. Only approved wheel discs will be permitted. Approved wheel discs are wheels discs that are fastened to the wheel using a minimum of three (3) 1/4" or 5/16" diameter magnetic steel hex head bolts. <u>No wheel covers allowed on left side of car</u>.
3. Only aluminum wheel spacers will be permitted. Wheel spacers must not be fastened

to the wheel.

4. The combined weight of the wheel, wheel hardware, wheel disc and fasteners, and tire must not exceed 40 pounds. The maximum combined weight in this rule is based upon current tire rules and may need to be adjusted at WISSOTA's discretion.

L. Springs

1. Coil springs or leaf springs will be allowed.
2. Coil springs must be manufactured from magnetic steel. Leaf springs must be manufactured from either magnetic steel or composite material.
3. Spring preload adjustments for coil springs must be made using mechanical adjusting nuts on the shock body.
4. Spring preload adjustments for leaf springs must be made using a mechanical adjusting device such as an adjustable shackle or threaded rod type mount.
5. Other than spring dampening by the shock absorber, hydraulic, pneumatic or electrically controlled adjusting devices (static or dynamic) that affect spring preload or race car heights will not be permitted.

[5] TIRES - DIRT

1. Hoosier W30s allowed on all four corners of the car. Hoosier W70 may be used on the right rear only. No grooving, no siping or pinning/needling is permitted on any tire. Buffing is permitted with no visual cuts. Aggressive, nail or traction-inducing sipe grinding will result in disqualification pre- or post-race. There will be no defacing or altering of manufacturer's identifying marks on the tire. You may not remove any letter, words or numbers that would identify the tire. Softening tires is not allowed. Any alteration of any tire may result in an immediate suspension from all WISSOTA racing. All money and points will be forfeited for that date, with the loss of all national points and track points for the year to date at the track where the infraction occurred. Any tire can be confiscated by a WISSOTA official any night, at any track, to be evaluated and returned within a reasonable period of time. At any time, if tire/tires are in question, any driver finishing in the top ten in a feature event may buy the tire/tires from any other driver that finished in the top ten in that feature. Guidelines will be that the buyer must pay the suggested retail amount needed to purchase another new tire/tires in cash plus sales tax in said state, shipping if charged, plus a mount or dismount fee if charged. The buy will take place at the time of scaling after the feature event and tire/tires must be removed at the track in a timely manner.
2. Rim width must not exceed 14 inches. No knock-off hubs or wheels. Any hard surface wheel disc when used must be mounted under a bead lock or bolted to wheel by at least three (3) bolts. No other hard surface wheel disc may be used. <u>No wheel covers on the left side of the car.</u>
3. Carbon fiber wheels not allowed.

[6] DRIVE TRAIN:

A. Drive train (must have transmission) and working clutch. No direct drives allowed. Must be able to shift to forward or reverse with engine running.

[7] ENGINES

<u>All weight must be painted on upper portion of both front fenders or both front window posts. If weight is changed you may tape over for that event. You must also display the engine type you are using (examples: Spec, Concept, Crate) on both front window posts</u>.

A. There can be a maximum of 25.5" from the center of the bottom ball joint to the front of the engine plate/engine bell housing flange. If measurement is over 25.5" (up to 29.5"), you must add 25 lb. in front of midplate. External coolant lines and external oil drain-back lines allowed on all engines.

B. No aluminum blocks, no titanium or exotic material parts except for valves and retainers, minimum 3/4" inspection hole in side of pan 2-1/2" down from pan rail in line with a journal. Inspection hole must be easily accessible to inspector.

C. Engines may be interchangeable.

D. **0-362 c.i.d. Iron Head/Spec Aluminum Head Engine Intake Manifold Rule** Maximum height limit of 7-1/4 inches from bottom of intake at valve galley rail to base of carb. Spacer may have four (4) holes or open plenum. A maximum of 300 thousandths of material is allowed between the bottom of the intake manifold and the lifter galley rail.

E. **RPM Chip Rule** All cars must run a functioning 8500 RPM chip in the ignition system. Working dial RPM boxes are also acceptable. Ignition system components must not be within the driver's reach while in the race car. A rotary or clicker box may be used to limit RPMs. More than one RPM chip/dial is allowed as long as they are set the same and meet the 8500 RPM rule as described above. Violation of the RPM rule is a speed infraction as defined in general rules.

F. All heads, including stock and aftermarket heads in all options, can have guide plates installed. Push tube area of heads can be opened up. Valve guide seals can be installed. You are allowed to replace valve guides but must follow stock geometry. Can use valve spring buckets/valve spring locators. Valve spring shims are allowed. Heads can be milled according to class rules and specific milling rules. Must follow all other class rules.

Following are descriptions of the types of engines allowed in the WISSOTA Late Model class:

Aluminum Spec Heads - 0-362 c.i. Only (2300 lbs.)

A. WISSOTA approved Brodix Spec Aluminum heads allowed. Allowed part numbers include:
   1. Chevrolet - SPCH WISSOTA
   2. Ford - SPFO WISSOTA
   3. Mopar - SPMO WISSOTA

B. Absolutely NO removing, relocating, grinding, polishing or defacing of any letters or numbers cast into the Brodix WISSOTA Spec aluminum cylinder heads.

C. Heads may be angle milled, although valve angle must remain within 1 (one) degree of original manufactured specification.

D. Valve guides must remain in original angle and spacing as manufactured. Valve guides may not be tapered, thinned or shortened in any way.

E. Absolutely no welding or adding material of any kind to the head.

F. Removal of material from the head is only allowed as listed below:
   1. Chamber may be ground for dome clearance and polished.
   2. Intake Port - Intake bowl may be blended and polished from the valve seat to the edge of the letter C in the word "Spec" on the roof and floor of the intake port. The side of the intake port may also be blended and polished from the valve seat to the same point as the roof and floor. Absolutely no grinding or polishing along the side walls where the spec logo is cast. Factory CNC port match must not be altered in any way.
   3. Exhaust Port - Exhaust seat may be blended into the exhaust bowl and exhaust port may be polished as long as the word "Spec" in the roof of the exhaust port is not touched and the exhaust port exit at the header flange remains in the original as cast location, size and shape.
   4. May machine for pushrod clearance.

G. Absolutely no enlarging, relocating or other altering of any head bolt hole, dowel hole, or threaded hole in the head except as noted below:
   1. May spot face head bolt holes after angle milling head.
   2. Heli coils may be used for repairs.
   3. Absolutely no grinding or polishing of rny kind anywhere on the casting, except in the combustion chamber, and in the areas of the intake port and exhaust ports as stated above, and for pushrod clearance.

H. Any internally repaired spec head must be recertified by Brodix.

I. Spec head checking fixtures will be used by WISSOTA officials to check all

specifications and dimensions listed above.

J. Only one ignition box allowed.

Cast Iron Head Engine [0-362 c.i.d.]

A. Must weigh 2300 pounds or more with driver after every race.

B. WISSOTA-approved cast iron heads only. No polishing, porting, grinding or adding of foreign material to ports or runners. Combustion chamber may be polished.
   1. Competition valve job permitted with the bottom cut not to exceed 3/4-inch below actual valve seat – Ford and Chrysler only. 1" below actual valve seat on the sportsman II head and 1-1/4 inch below actual valve seat on the bow-tie heads. Any cut over 60 degrees must be cut with cutter not by a stone. Cut must be concentric with valve guide.

C. The heads listed in C-1, C-2, C-3 and C-4 are WISSOTA's choice of cast iron heads.
   1. Chevy "bowtie" heads - intake port size 1.240 width, 2.140 height; exhaust port size 1.365 width, 1.300 height. No turbo heads.
   2. World Products Sportsman II Part No. 1115, Casting No. 1-037. Early Sportsman port sizes: Intake width 1.235, height 2.010. Exhaust width 1.420, height 1.500. Later sportsman port sizes: Intake width 1.235, height 2.035; Exhaust width 1.425, height 1.345. Newer sportsman port sizes: Intake width 1.240, height 2.050; Exhaust width 1.425, height 1.420.
   3. Chrysler W-2 heads only. Intake port size 1.350 width, 2.250 height; exhaust port size 1.450 width, 1.440 height.
   4. Ford S.V.O. cast iron head, part no.'s M-6049-E-351 and M-6049-N351. Intake port size 1.10 width, 2.03 height; exhaust port size 1.20 width, 1.33 height.

Sealed Crate Engine - GM CT525

1. Only sealed crate engines are allowed. May not be altered from stock condition.
2. Must say "Crate" on left front roof post.
3. Mandatory ignition controller MSD p/n 6014CT, maximum timing 26 degrees, rev launch 7,000, rev max 7,000. Engine performance must follow this dedicated timing curve:

Engine Speed	Ignition Timing
0	15.0
900	20.0
2000	24.0
3500	24.0
5000	24.0
6000	26.0

4. Maximum RPM 7000.
5. May use any 4 barrel carburetor, gas or alcohol.
6. May use any headers.
7. Minimum weight with driver, after race, is 2275 pounds.
8. Eight and one-half (8.5) inch maximum spoiler allowed.
9. Maximum 25.5 inch setback of engine to front of midplate.
10. Must follow all other WISSOTA Late Model rules.

Sealed Crate Engine - GM 604

1. Car must say "604" on the left front roof post.
2. May use any four barrel carburetor, gas or alcohol.
3. Maximum RPM 6800.
4. May use any headers.
5. Minimum weight with driver, after race, is 2250 pounds.
6. 10" maximum spoiler allowed.
7. Must follow all other WISSOTA Late Model rules.

WISSOTA Late Model Concept Engine

1. Any cast iron block, no unnecessary machine work inside or outside of block. No lightening, no coating, painting, or any other work to inside of intake manifolds, heads and block lifter galley allowed. Minor deburring is allowed.
2. 362 cubic inch maximum.
3. 14:1 maximum compression.
4. Steel oil pan only, wet sump oil system, cast iron oil pump in stock location. Oil pan must have an inspection hole.
5. Aluminum intake untouched. 7.25 inches from bottom of intake to base of carburetor, including spacer and gaskets.
6. WISSOTA spec. Brodix Chevrolet SPCH, Ford SPFO, or Mopar SPMO spec heads, ports as cast. Absolutely no removing, relocating, grinding, polishing, or defacing of any letters or number cast into the Brodix WISSOTA Spec aluminum cylinder heads. No work on the inside of heads including combustion chamber. Heads may be angle milled, although valve angle must remain within 1 (one) degree of original manufactured specification. Valve guides must remain in original angle and spacing as manufactured. Valve guides may not be tapered, or thinned, or shortened in any way. Absolutely no welding or adding of material of any kind to the head. May machine for pushrod clearance. Absolutely no enlarging, relocating or other altering of any head bolt hole, dowel hole, or threaded hole in the head except as noted below. May spot face head bolt holes after angle milling head. Heli coils may be used for repairs. Absolutely no grinding or polishing of any kind on head casting except for pushrod clearance. Any internally repaired spec head must be recertified by Brodix. Spec head checking fixtures will be used by WISSOTA officials to check all specifications and dimensions.
7. Stud mount rocker arms only, no shaft rockers, 1.6 max. ratio, stud girdle allowed.
8. Steel valve spring retainers/locks only. No hollow stem or titanium valves. Valve stem must be 11/32 in size.
9. Cast iron flat tappet cam, stock diameter journals, conventional stock diameter cast iron lifters, no tooled steel lifters, no mushroom lifters.
10. Timing chain only; no gear drive.
11. Stock diameter babbit cam bearing only.
12. Cam must be stock firing order, in stock location; no raised cams.
13. 7800 maximum RPM limit.
14. No crank trigger ignition.
15. Crankshaft: no under cutting of counterweights, no gun drilled mains, no low mass crankshafts. Crankshaft must have a minimum weight as follows: Chevrolet 45 lbs., Ford 42 lbs., Mopar TBA.
16. Steel rods only.
17. Steel balancer only.
18. Maximum spoiler height of 10 inches with same spoiler supports as Late Models using 0-362 WISSOTA engine as descibed in current rule book.
19. Total weight after race, with driver included, must be a minimum of 2,250 pounds.
20. Alcohol fuel only.
21. Must follow all other WISSOTA Late Model rules.
22. Rule options are subject to review/change as deemed necessary by WISSOTA at any time.

All engine options are subject to review/change as deemed necessary. If rules do not specifically say you can have said part, it means you cannot have said part or alterations to said part.

[8] ASPIRATION AND FUEL

A. Fuel must be gasoline, ethanol-enriched gasoline or alcohol. No oxygenated fuel other than methanol or ethanol is allowed. No nitrous oxide, or nitro. No nitrous devices allowed. No nitro-methane or propylene oxide.

B. Carburetion - one (1) two- or four- barrel. No floatless carburetors allowed. Must use Holley-style straight leg or down-leg boosters only.

C. No fuel injection.

[9] ALUMINUM: SEE ENGINES UNDER [H]

[10] ENGINE PROTEST RULE: SEE SECTION 6 IN FRONT OF BOOK.

[11] PUMPING: SEE SECTION 7 IN FRONT OF BOOK.

2020 WISSOTA MODIFIED RULES

Revised 11-19

NOTICE: PLEASE NOTE THAT THIS CLASS IS ALSO REQUIRED TO COMPLY WITH ALL WISSOTA RULES SET FORTH IN:

SECTION 1 .....GENERAL RULES
SECTION 2 .....GENERAL POLICIES
SECTION 3 .....MINIMUM SPECIFICATIONS
SECTION 4 .....POINT SYSTEM
SECTION 5 .....ENGINE CLAIM
SECTION 6 .....ENGINE PROTEST RULE
SECTION 7 .....ENGINE PUMPING RULE

IN FRONT OF THIS RULE BOOK.

[1] ROLL CAGES

A. Main cage must consist of continuous hoops, minimum of 1.666 O.D. tubing, with a minimum wall thickness of .095, must be frame mounted in at least 6 places. A low-carbon or mild steel tubing is recommended. Other materials are subject to approval by WISSOTA. No iron pipe or square tubing allowed. No brazing or soldering allowed.

B. Must consist of a configuration of front, rear and top hoops connected by tubing on sides or side hoops. Driver's head must not protrude above cage with helmet on and strapped in seat. Roll cage must be securely supported and braced. Foot protection bar is required.

C. Door bars must be a minimum O.D. of 1.500 inches and a wall thickness of at least .095, a fourth door bar is highly recommended. Side bars must be as parallel with the ground as possible, and located perpendicular to the driver so as to provide maximum protection for the driver, but without causing undue difficulty in getting into or out of the vehicle. Side bars must be welded to the front and rear of the roll cage members and must be attached to the frame in at least 4 places. No brazing or soldering allowed.

D. Low-carbon mild steel tubing is recommended. Other materials are subject to prior approval. No iron pipe or square tubing allowed. No brazing or soldering allowed.

E. A safety vent bar is mandatory on every car. It must run from top door bar to A pillar bar. A door plate is also mandatory on every car. Door plate must be minimum 18 gauge steel, must be attached to the outside of the door bars and must go from top door bar to bottom door bar. Door plate must also run from back of driver's seat to at least five inches in front of driver's seat. Door plate can be welded or bolted to the outside of the door bars.

F. Bumpers must be used both front and rear. Front bumper must be within the front frame horns, using two parallel bars spaced no less then five (5) inches apart and a maximum of eight (8) inches apart; maximum bumper width is 44 inches and both bars must be completely even with each other. There may not be any square edges; all corners must be round. Front surface may be flat, no excessive metal. (See diagram on bumper dimensions.) Pipe must be of at least 1-1/4-inch metal and must be able to support a lift by the wrecker. No body part can extend past front bumper. Front nosepiece can be plastic but not lexan.

G. Rear bumpers and bars must not extend beyond width of rear tires.

H. Rear bumpers may be constructed of pipe or flat stock, but must not have any sharp edges. No excessive metal.

I. Side rub rails must be securely fastened, consisting of one or two (if desired) parallel bars. If two bars are used, they must be connected and all corners must be rounded. No sharp edges. No excessive metal.

J. Rear bumper tubing must make a complete loop back to the frame. Bumper may be cut off a maximum of two (2) inches outside the frame rails. Car must also have a mandatory

fuel cell nerf bar/bumper, located a maximum of 14" off the ground, which protects the rear of the fuel cell.

[2] BODIES

A. 1970 or newer American compact passenger car only; no panel vans or station wagons. Stock-appearing front windshield and rear window support unit; painted roll bars are not an acceptable substitute. May utilize a flat half-windshield, with no wings, mounted to the roll cage. Must have a minimum of three (3) windshield bars in front of driver. Must have minimum 2" clearance of body around circumference of all tires when car is sitting static at ride height and driver is in seat.

B. Firewall and floorboard are mandatory. Fiberglass or metal duplicates of body parts are permitted. Handmade body parts may be constructed of steel, aluminum, or fiberglass. Body must be the same width front to rear, and parallel to the frame. No concave body parts.

C. Original roof line/rake must be maintained (see body diagram); full size roof only. May be made from fiberglass, steel or aluminum must have front windshield and rear window support posts. Roof bead rolls/fins/supports cannot be more than 3/4" high off the flat of the roof with a maximum of five per roof. Rear roof sail may have a gradual curve from rear edge of roof to top of spoiler not to exceed 3" above a straight line from rear edge of roof to top of spoiler. This will be measured by placing a straight edge from rear edge of roof to top of spoiler. Measured up to the highest point of roof sail, measured at a 90 degree angle to the straight edge this measurement may not exceed 3 inches. Sail panels must be the same, side-to-side. Front of rear sail panel/roof post can be no further forward than the back of the seat at shoulder height. Any reinforcing lips on rear of sail panels must be 180 degree bends. WISSOTA Modifieds may use a spoiler on the rear of the deck. The maximum spoiler height is determined by engine used (see engine rules). No other spoilers, wings or ground effects are allowed anywhere outside or inside the car. Minimum side window openings is 12" measured at the lowest point at the top of the window, whether roof or roll cage, to the highest point at bottom of window, weather interior or body. Roof/rear sail panel can have a maximum of 2" outward bow from top to bottom. Front roof post can be maximum 8" at bottom to 4" on top. Aftermarket plastic manufactured molded roofs and rear roof posts/sail panels are allowed as long as they meet the class' roof, rear roof post/sail panel dimensions.

D. The top edge of the rear quarter panel and door must be in a straight line, <u>within 1" tolerance up, down, left and right on both sides of the car.</u> If you use sail panels for support, you can have only one additional spoiler support.

E. Engine compartment can remain open or be can enclosed by side panels. Hood must be enclosed at the rear, and the maximum hood scoop height is 6 inches. Door panels can be a maximum of 32 inches from top to bottom including plastic runner at bottom of door. The top of the body (door panel) should extend no further forward than the back of the engine block. The bottom of the body (door panel) may extend up to 12 inches forward from the back of the engine block. Rear of body (below rear deck) must have a solid panel the width of the body and extending straight down. Panel must be a minimum of 8 inches high; it is recommended that panel is painted a bright color and include car number.

ALL MODIFIED SPOILER SUPPORT DIAGRAM

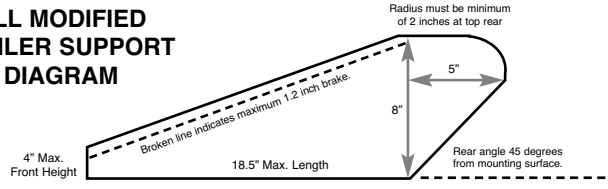

No more than 3 spoiler supports permitted (a 1" steel strap is not considered a spoiler brace). Front edge of spoiler support must be inline.

DIAGRAM MOD-1

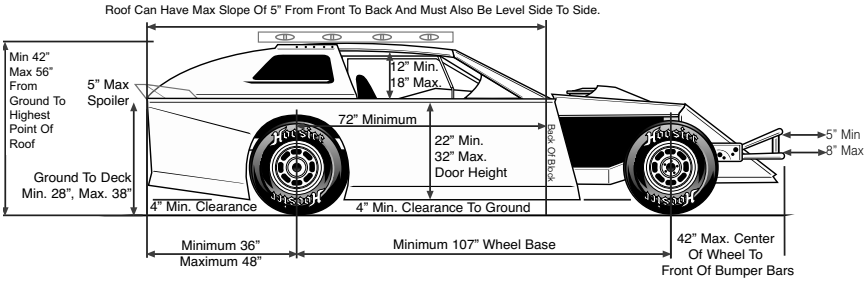

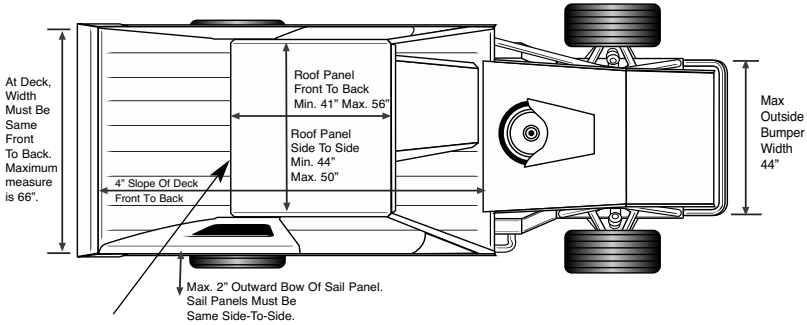

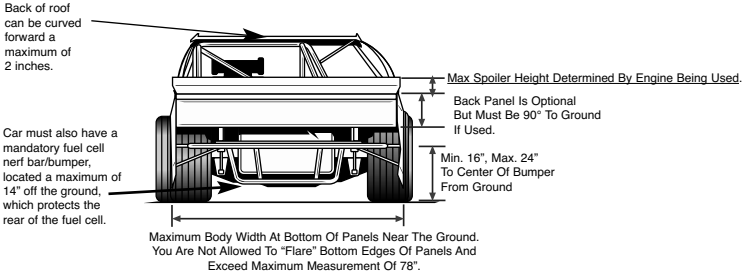

Notes Related To Diagram:

Driver's Compartment: Driver's Compartment Must Be Totally Sealed From Engine And Race Track.

Slope Of Deck: There Can Be A Maximum Of 4" Slope Of Deck Front To Back. There Can Be 2" Of Slope From Front Of Cockpit To Back Of Driver's Seat And 2" Of Slope From Back Of Driver's Seat To Rear Of The Deck. If Deck Is Level From Front Of Cockpit To Driver's Seat, You May Still Only Have 2" Of Slope From Back Of Driver's Seat To Rear Of Deck. Top Of Interior Must Be Flush With The Top Of Doors And Quarter Panels.

Escape Hatch: An Optional Escape Hatch May Be Used On Right Side Of Car By Bringing The Metal From Top Of Right Door Down To The Driver's Compartment No Higher Than 12" From The Floor Pan. Front And Rear Of Escape Hatch Must Be 90° Angle To Interior.

Doors: Front Of Doors May Stop In Vertical Line At Or Behind The Back Of The Engine Or May Be Raked From Bottom To Top As Described In Section (2) Bodies.

Left Rear Tire: Left Rear Tire May Be Partially Outside Body And Nerf Bar And Be Visible From Front, Rear And Top.

Rear Panel: Rear Panel Must Be Solid And Attach To Deck, And Must Extend To Both Quarter Panels. It Must Be Securely Fastened.

F. The leading edge of the quarter panels must have the same measurement from top to bottom as the door panels. However, the quarter panel may be tapered toward the rear of the car up to three inches when measured from front to back.
G. Maximum of two 3 inch fins may be mounted on each side of the nosepiece (one on each side of the car). Nosepiece must be a minimum of 6" above ground on front and sides. It can be no wider than frame horns and no further back than radiator.
H. No plastic body parts allowed except for nose piece, door runner or quarter panel runner.
I. Driver- and passenger-side windows must have at least 12-inch vertical opening.
J. No car covers or covers on suspension parts. Boot covers allowed on shock rods only.
K. Must have full-length floor pan under driver (20-gauge minimum thickness steel or .125 aluminum).

[3] CHASSIS AND WHEEL BASE

A. Factory production complete full 1960 or newer parallel American passenger car frames only. Frames may be cut in rear only at point not further than 36 inches from center of rear-end housing. No front clips or tube-type allowed.
B. Frames may not be widened or narrowed and must be able to support roll cage on both sides. Must be full and complete both sides. Front cross member must remain intact where joined at the frame rails; center of cross member may be notched for radiator and/or steering clearance only. Right front outside corner of frame rail cannot be more than a maximum of 7.25" above the ground after the race. Frame may be notched for tie rod clearance. Top of frame may be notched for A-arm clearance. Minimum frame and body height from ground is four (4) inches (exception is front cross member).
C. No Jeep, Bronco, et al, or four-wheel-drive frames allowed. No sports car frames allowed. No front-wheel-drive allowed.
D. No raising, altering or twisting of frame rails is allowed. No moving of suspension mounts/holes. No intermingling of frame pieces. All factory holes must be present for inspection. All mesurements must be within one half inch (either way) of OEM measurements - no tolerance. Top front spring pocket must be present.

DIAGRAM MOD-2

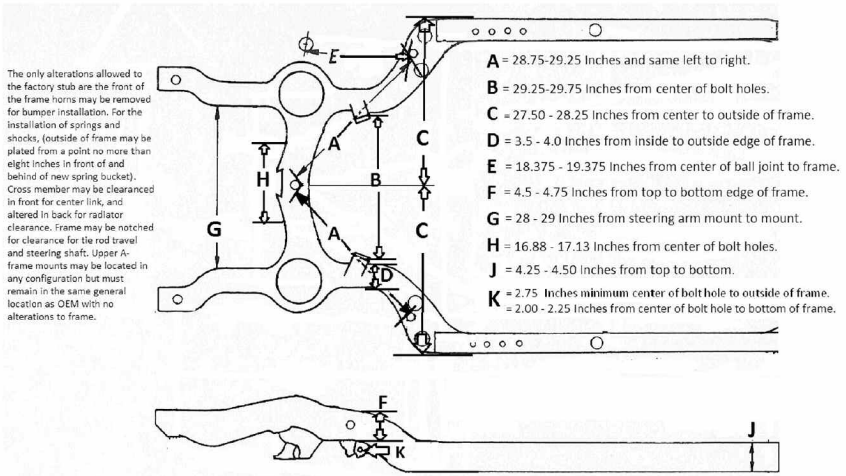

1968 - 1972 GM Chevelle Frame

[4] SUSPENSION - FRONT AND REAR

A. These rules are subject to change as needed at any time for any reason as deemed by WISSOTA in the best judgment or interest of the sport of Modified racing.

1. Must remain stock-type for the type of frame being used. Steel aftermarket parts may be used as stock components as long as they mount in the stock location and are the same size as the OEM parts.
2. Aluminum and/or titanium components are strictly forbidden. Magnet must stick to all components. No exotic materials allowed.
3. Stock passenger car spindles allowed. Three-piece aftermarket GM metric spindles by Speedway Motors (part numbers 91034511 or 91034501) and Argo AMC Pacer spindle (part number RP929) are allowed. Must use same steering arm side to side. No other fabricated spindles are allowed. Bottom A-frames may not be altered, lightened or moved and must match side-to-side.
4. Front sway bars may be used. Front sway bars must be made of steel and may be attached to the bottom A-frame using steel heim joints. Must be solid full-length OEM.
5. Only one mechanical traction device allowed. Only one pull bar or one lift arm is allowed. No other options/configurations will be alllowed.
6. Floating, pivoting or rotating mounts or brackets of any sort (connected or associated to the pull bar or lift arm) are not allowed.
7. Lift arm is defined as solid steel triangulated bar that is connected at the top (with one heim) and bottom (with one heim) of the rear end housing extending forward where it is connected to a shock (that may utilize only the heim directly related to that one shock (one on each end), shock spring coil over combination (that may utilize only the heims directly related to that one shock (one on each end) or a limiting chain (with or without a biscuit for cushion - only one heim is allowed in this configuration). One stabilizer bar is allowed to be located on the front of the lift arm from left to right in the car.
8. Pull bar is defined as a continuous assembly (that may or may not contain a spring or biscuit assembly located in line to absorb torque) that is connected to the top of the rear end with one heim and extends forward to a solid mounting point located on the chassis where it is connected with one heim. The mounting location at both the front and rear of the pull bar may be adjustable but must remain constant during competition (may not be adjustable from the cockpit). One additional shock is allowed in the center of the car as a traction or safety device (for example: 90/10 over the pull bar). Fifth shock is only allowed in relation to pull bar or lift arm (example 90/10 mounted inline with pull bar). This shock must run in the same direction as pull bar.
9. No brake bar is allowed with pull bar.
10. Rubber bushing and/or biscuits are permitted on both lift arm and pull bar application, but must be directly connected and functioning in relation to corresponding part only.

B. Suspension: All front suspension components must be steel unaltered O.E.M. in O.E.M. location and replaceable by O.E.M. parts. Center link brace for steering is not allowed. Bottom A-frame mounts and bottom A-frame bushings must be in stock location. Bottom A-frame bushings must have bolt hole in the center of the bushing, not an offset bolt hole. Exceptions are: tube type upper A-frames with or with out cross shaft and mounts can be moved. Weight jack must be in original center line of spring. Stock passenger car spindles only, no fabricated spindles. Ford Pinto spindles are allowed. Spindles with bolt-on caliper bracket must have the caliper on the back side of the spindle. Ball joint end of the bottom A-arm can be removed for rotor clearance. Ball joint locations must follow ball joint rule. Welding a steel sleeve in the ball joint hole in the bottom A-frame is allowed. Bottom ball joints must be mounted with the pin pointed up; top ball joints must be mounted with the pin pointed down. Tie rod ends/heim joints can be mounted under the steering arm. A spacer is allowed under the steering arm. Both bottom A-frames

cannot be altered or moved from stock location. Spindles and bottom control arms must be the same from side-to-side. No aluminum or fiberglass suspension or rear end parts allowed. Steering box must be O.E.M., non-lightened, and must remain in original bolt pattern for frame being used. No rack and pinion steering allowed.
In-cockpit steering may be modified to suit driver, but must be kept on the left side of cockpit. No center steering allowed. Lower ball joint may be aftermarket, but must be steel and must remain in stock location, plus or minus .25 inch. Calipers cannot be lightened and must be OEM. Rotors cannot be lightened. Rotors may be redrilled for different bolt pattern or larger studs. No drilled lightned rotors allowed. Vented rotors only front and back. Sixteen (16) vane rotors allowed. Slotted rotors are allowed. Must use steel fasteners. Rear rotors must weigh a minimum of 6.5 lbs.

C. Rear suspension arms must be steel. All rear suspension radius rods, lift arms, panhard bars must be of fixed solid design. Absolutely no hydraulic cylinder, bump rods, spring rods, slider rods or shock type radius rods will be allowed to locate the rear end.
D. No remote or external canister type shocks allowed. Aluminum shock heim ends are allowed. No more than two-way adjustable shocks. Conventional type (closed on one end) shock absorbers only. Single shaft shocks only. Electronically controlled or monitored shocks by any means or methods are not allowed. Cockpit-adjustable shocks are not allowed. Driver cannot be able to adjust shocks while on track during a race. Inerter shocks, J-damper shocks, active mass damper shocks, through-rod designed shocks are not allowed. Shocks must be steel. Front half of shocks can be covered. Coil over or coil over eliminator kit may be aluminum or steel. Dummy shock or slider must be steel. May have aluminum heim ends. Coil overs allowed on rear end only. Lift bar may have same type of coil-over as the rearend. Any live shock used must be steel.
E. Rear of frame may be altered to accept leaf or coil springs; any coil spring must be at least 4.5 inches outside diameter. Steel springs only. No progressive or welded springs are allowed, other than progressive springs on pull bars. Springs must be same outside diameter from top to bottom. No spring rubbers are allowed. Spring wire diameter and coil spread must remain consistent from one end to the other; last coil on each end must be closed and shaved off to create flat surfaces for mounting. Front springs must be shaved closed on top end and closed on other end. Conventional spring mounting devices only; no widgets, trick or spring-altering mounting devices will be allowed. No limiting devices are allowed on front suspension components, including but not limited in relation to: shocks, springs, upper or lower A-frames (except where specific class rules allow specific alterations). No torsion bars allowed in rear. Front coil springs must be 9.5" free height with 0.5" tolerance. Rear coil springs must be 11"-16" free height with 0.5" tolerance.
F. No hydraulic, ratchet or electric weight jacks anywhere in or on car. No air shocks or air bags allowed.
G. One shock per wheel only. Additional shocks in other locations permissible. The maximum amount of travel-limiting material on shock shaft is one half inch (1/2)". This means anything above/below the shock shaft threaded end. Internal bump stops are not allowed.
H. Minimum wheelbase 107 inches [no tolerance] both sides. Maximum overall width (front or rear) shall not exceed 78 inches from outside of tread to outside of tread.
I. Steel swedge tubes with steel heim joints are allowed.
J. Aluminum shock extensions are allowed.
K. Dummy shock/slider cannot have Schrader Valve or any other ports. Also, dummy shock/slider cannot have any rod force. Rear dummy shocks or sliders cannot have packers, bump stops, biscuits, or any other materials on the shaft, and springs are not allowed to have any spring rubbers attached.
L. Aluminum top A-frame cross shafts are allowed.
M. Must have brakes on each wheel; this includes 4 calipers and 4 rotors (no aluminum or exotic materials calipers). Must be able to lock up all 4 wheels for inspection (brake

shutoff allowed on right front).

N. Shocks, springs, new designs/components:
   1. No cross connected shocks are allowed.
   2. Any new chassis design or component designs pertaining to and/or but not limited to shock absorber mounts must be submitted to WISSOTA for approval before they will be permitted for use in competition. Manufacturer and/or competitor may be required to disassemble for complete inspection before instatement of the new part is permitted.
   3. Shocks must mount vertically to the birdcage or clamp bracket.
   4. Drop chain (limiting chain) is permitted on rear end only. Must mount vertically between frame and clamp bracket.
   5. A swing arm and/or Z-link suspension is permitted as long as the top and bottom solid links are mounted on hiems and run in the opposite directions of the bird cage. The shock on a swing arm or Z-link rear suspension may mount to the bird cage or the bottom radius rod.

O. Suspension Components
   1. Any new chassis design or component design and or technology pertaining to and/or containing suspension must be submitted to WISSOTA for approval before they will be permitted for use in competition.
   2. Frame and/or suspension mounts must be welded or bolted solid to the frame and not move. ie floating, pivoting and/or rotating mounts and/or brackets of any sort are not allowed.
   3. Bolted components must match the correct bolt size with the hole.

P. Radius Rods
   1. Radius rods must be minimum of 7/8″ diameter O.D. Rods can be round, square, or hex shaped. Rods must be minimum of .095 steel.
   2. Heim joints must be minimum 5/8 and maximum of 3/4 steel heim. No rubber bushings.
   3. Only 2 two radius rods per side.
   4. Radius rods must be spaced on the frame a minimum of 6″.
   5. Radius rods must be spaced on the bird cage a minimum of 6″ and a max. of 12″.
   6. Measurements will be made from center of each radius rod bolt.

Q. Birdcages
   1. Birdcages may consist of multiple barrels but must bolt or weld together to work as one single barrel birdcage.
   2. Limited to one (1) bird cage per side.
   3. Shock(s) and radius rods must mount to the birdcage.
   4. Floating, pivoting and/or rotating mounts and / or brackets of any sort are not allowed. All brackets or mounts attached to the birdcage must be bolted or welded solid.
   5. Birdcages and all other birdcage attachments, including retaining rings/collars must be similar in design side to side. Must be made of steel and must weigh within six (6) pounds of one another total. Detail must be paid to functionality.

[5] TIRES AND WHEELS

A. The Hoosier WISSOTA 35W tire will be the only tire allowed on the car. There will be no defacing or altering of manufacturer identification marks or numbers on the tires.
   No softening or treating of tires is allowed. Siping and grinding are allowed; grooving is not allowed. No tire needling.

B. All wheels must be WISSOTA-certified, stamped and stickered with WISSOTA logo.
   Steel wheels only: maximum 8-inch wheels; bead locks will be allowed on the right rear and right front wheels only: 3/4-inch tolerance will be allowed for bead lock. If screws are used, the wheels may not exceed the 8-inch limit. No modifications allowed on wheels. Steel bead lock only. Wheel spacer and/or adapter from the rotor to the rim cannot

exceed 1-inch total thickness. Wheel spacers may not have a diameter greater than 7.25 inches, and they may only be made of aluminum. No wheel spacers made of other materials, or greater thickness or diameter, may be used.

C. Any hard-surface wheel disc, when used, must be mounted under a bead lock or bolted on wheel with at least three (3) bolts. No other hard-surface wheel discs allowed. Wheel spacers/adapter may not exceed one (1) inch. No wheel covers are allowed on the left side of the car.

[6] DRIVE TRAIN

Transmissions & Clutch Rules

A. All cars must have transmission with working clutch.
B. All transmissions with working clutch must be able to shift to forward and reverse with engine running.
C. No in or out box transmissions are allowed.
D. All cars must start and move both in forward and reverse without being pushed or pulled onto the race track.
E. No ball spline type transmissions allowed.
F. All transmissions must have a stock type slip yoke.
G. Quick change transmissions allowed.
H. Drive shafts must be a minimum outside diameter of 2" and must use a conventional slip yoke design. Drive shafts must be constructed of steel and painted white.

Rear-Ends

A. Any passenger car or truck stock appearing rear end may be used. Quick change rearends are also allowed but with steel tubes only. Aluminum spool allowed in quick change only. All bird cages, pullbar mounts, pinion mounts, J bar/panhard bar mounts and all other bolt-ons must be steel. 10" ring and pinion only. No weighted rear ends. Axle tube must be one-piece. The outside diameter of the axle tube must not exceed three inches. Axle tube inserts or external sleeves will not be permitted. Axle tubes must be steel with a maximum thickness of 1/4 inch.
B. No limited slip type rear ends are allowed.
C. No lightwight metal rear ends allowed, including aluminum, magnesum, titanium or exotic materials. No aluminum or exotic metal hubs, hats, rotors, calipers, A-frames, spindles, drive shafts or weight jacks allowed.
D. The only aluminum allowed on the rear end is as follows: aluminum leaf spring spacer blocks, shackles, shock heim ends, drive plates and dust caps. In addition, aluminum or magnesium quick change center section is allowed. Aluminum ring and pinion carrier in quick change is allowed.

[7] ENGINES

Cylinder Heads The following machining can be done to cylinder heads in the following engine combinations: 0-362 c.i. Spec Engine, and WISSOTA Modified Concept Engine (this does not apply to the GM 604 Sealed Crate Modified Engine: All heads, including stock and aftermarket heads in all options, can have guide plates installed. Push tube area of heads can be opened up. Valve guide seals can be installed. You are allowed to replace valve guides but must follow stock geometry. Can use valve spring buckets/valve spring locators. Valve spring shims are allowed. Heads can be milled according to class rules and specific milling rules. Must follow all other class rules. External coolant lined and external oil drain-back lines are allowed on all engines.

0-362 c.i. Spec Engine

A. The word "Spec" must be in bold letters on both sides of the hood, both sides of hood scoop, or on both front window posts in clear view of officials.
   1. No aluminum heads, no aluminum blocks.
B. Head Rule - Spec Engine Only WISSOTA-approved cast iron heads only. No polishing, porting, grinding or adding of foreign material to ports or runners. Combustion chamber

may be polished.

1. Competition valve job permitted with the bottom cut not to exceed 3/4-inch below actual valve seat – Ford and Chrysler only. 1 inch below actual valve seat on the sportsman II head and 1-1/4 inch below actual valve seat on the bowtie heads. Any cut over 60 degrees must be cut with cutter not by a stone.
2. Roller rockers and roller cams allowed.

C. The heads listed in C-1, C-2, C-3 and C-4 are WISSOTA's choice of cast iron heads.

1. Chevy "bowtie" heads. Intake port size 1.240 width, 2.140 height; exhaust port size 1.365 width, 1.300 height. No turbo heads.
2. World Products Sportsman II Part No. 1115, Casting No. 1-037 port sizes. Early Sportsman: Intake width 1.235, height 2.010; Exhaust width 1.420, height 1.500. Later Sportsman: Intake width 1.235, height 2.035; Exhaust width 1.425, height 1.345. Newer Sportsman: Intake width 1.240, height 2.050; Exhaust width 1.425, height 1.420.
3. Chrysler W-2 heads only. Intake port size 1.350 width, 2.250 height; exhaust port size 1.450 width, 1.440 height.
4. Ford S.V.O. cast iron head, part no.'s M-6049-E351 and M-6049-N351. Intake port size 2.05 width, 1.220 height; exhaust port size 1.575 width, 1.486 height.

D. No dry sumps allowed. No external engine oil pumps of any kind allowed. No vacuum pump/air pumps allowed.

E. No titanium or exotic materials parts allowed except for valves and retainers.

F. Minimum 3/4-inch inspection hole in side of oil pan 2-1/2 inches down from pan rail in line with a journal. Inspection hole must be easily accessible to inspector.

G. The intake manifold height limit is a maximum of 7-1/4 inches from the bottom of intake at valve galley rail to base of carburetor. Any spacer may be used to raise carb to the 7-1/4-inch height. A maximum of 300 thousandths of material is allowed between the bottom of the intake manifold and the lifter galley rail.

H. No magnetos. GM HEI distributor can be interchanged in Ford and Mopar engines.

I. Any American-made engine may be used as long as rear of engine (bellhousing flange) is mounted at least 72 inches forward from the centerline of the rear axle. Engine offset must be kept within the frame rails.

J. These cars must weight a minimum of 2,450 pounds after all races with the driver and weight must be posted on side of race car in view of officials.

K. Maximum 6 inch spoiler.

M. **RPM Chip Rule** All cars must run a functioning 8500 RPM chip in the ignition system. Working dial RPM boxes are also acceptable. Ignition system components must not be within the driver's reach while in the race car. A rotary or clicker box may be used to limit RPMs. More than one RPM chip/dial is allowed as long as they are set the same and meet the 8500 RPM rule as described above. Violation of the RPM rule is a speed infraction as defined in general rules.

WISSOTA Modified Concept Engine

1. Any cast iron block, no unnecessary machine work inside or outside of block. No lightening, no coating, painting, or any other work to inside of intake manifolds, heads and block lifter galley allowed. Minor deburring allowed.
2. 362 cubic inch maximum.
3. 14:1 maximum compression.
4. Steel oil pan only, wet sump oil system, cast iron oil pump in stock location. Oil pan must have an inspection hole.
5. Aluminum intake untouched. 7.25 inches from bottom of intake to base of carburetor, including spacer and gaskets. Absolutely no machining or other work which removes or adds material can be done to intake manifold. The only intake manifolds allowed are: Chevrolet, Edelbrock p/n 2925, Brodix p/n HV 1000 or

p/n BM 1000, Holley p/n 300110 or 300-25, World Products Motown p/n 06140, RHS p/n 12902; Ford, Edelbrock p/n 2934, 2921, 2928, 2980, 2981.

6. WISSOTA spec Brodix Chevrolet SPCH, Ford SPFO, or Mopar SPMO spec heads, ports as cast. Absolutely no removing, relocating, grinding, polishing, or defacing of any letters or number cast into the Brodix WISSOTA Spec aluminum cylinder heads. No work on the inside of heads including combustion chamber. Heads may be angle milled, although valve angle must remain within 1 (one) degree of original manufactured specification. Valve guides must remain in original angle and spacing as manufactured. Valve guides may not be tapered, or thinned, or shortened in any way. Absolutely no welding or adding of material of any kind to the head. May machine for pushrod clearance. Absolutely no enlarging, relocating or other altering of any head bolt hole, dowel hole, or threaded hole in the head except as noted below. May spot face head bolt holes after angle milling head. Heli coils may be used for repairs. Absolutely no grinding or polishing of any kind on head casting except for pushrod clearance. Any internally repaired spec head must be recertified by Brodix. Spec head checking fixtures will be used by WISSOTA officials to check all specifications and dimensions.
7. Stud mount rocker arms only, no shaft rockers, 1.6 max. ratio, stud girdle allowed. Mopars must use T&D Machine products rocker arm system p/n 8019.
8. Steel valve spring retainers/locks only. No hollow stem or titanium valves. Valve stem must be 11/32 in size.
9. Cast iron flat tappet cam, stock diameter journals, conventional stock diameter cast iron lifters, no tooled steel lifters, no mushroom lifters.
10. Timing chain only; no gear drive.
11. Stock diameter babbit cam bearing only.
12. Cam must be stock firing order, in stock location; no raised cams.
13. 7800 maximum RPM limit.
14. No crank trigger ignition.
15. Crankshaft: no under cutting of counterweights, no gun drilled mains, no low mass crankshafts. Crankshaft must have a minimum weight as follows: Chevrolet 45 lbs., Ford 42 lbs., Mopar TBA.
16. Steel rods only.
17. Steel balancer only.
18. Alcohol fuel only.
19. Minimum weight with driver after race is 2,450 lbs.
20. Maximum spoiler height is 6". Sail panels must be of same configuration as all other Modifieds regardless of engine package.
21. Must follow all other WISSOTA Modified rules.

GM 604 Sealed Crate Modified Engine

A. The word "Crate" must be in bold letters on both sides of the hood, both sides of the hood scoop, or on both front window posts in clear view of officials.
B. Four barrel carburetor allowed, gas or alcohol. No floatless carburetors allowed.
C. Any 2" maximum carburetor spacer is allowed.
D. Maximum RPM limit of 6400.
E. Any headers are allowed.
F. Minimum weight with driver, after race, is 2,400 lbs.
G. Maximum spoiler height is 7". Sail panels must be of same configuration as all other Modifieds regardless of engine package.
H. Must follow all other WISSOTA Modified rules.

All options are subject to review/change as deemed necessary. If rules do not specifically say you can have said part, it means you cannot have said part or alterations

to said part.

[8] ASPIRATION AND FUEL

A. One (1) carburetor only. Two- or four-barrel allowed. Gas or alcohol allowed. No floatless carburetors allowed. Must use Holley-style with straight-leg or down-leg boosters only.

B. No fuel injection. No electric fuel pumps. Rear-mounted belt-driven fuel pumps allowed. No turbos. Engines must be able to accept and operate on a stock vacuum fuel pump.

C. Fuel must be gasoline, ethanol-enriched gasoline or alcohol. No oxygenated fuel other than methanol or ethanol is allowed. No nitrous oxide, or nitro. No nitrous devices allowed. No nitro-methane or propylene oxide.

[9] ALUMINUM

A. Aluminum parts allowed are leaf spring spacer blocks, shackles and radiator.

B. Aluminum drive plates and dust caps may be used on all rear ends.

C. Quick change aluminum or magnesium center section allowed, aluminum ring and pinion carrier allowed and aluminum spool allowed in quick change rear ends only.

[10] You must display the weight and type of engine option you are using (examples: Spec, Concept, Crate) on the left front window post, side of the hood or hood scoop, or left front roof post.

[11] ENGINE CLAIMING RULE: SEE SECTION 5 IN FRONT OF BOOK

[12] ENGINE PROTEST RULE: SEE SECTION 6 IN FRONT OF BOOK

[13] ENGINE PUMPING RULE: SEE SECTION 7 IN FRONT OF BOOK

2020 WISSOTA SUPER STOCK RULES

Revised 11-19

NOTICE: PLEASE NOTE THAT THIS CLASS IS ALSO REQUIRED TO COMPLY WITH ALL WISSOTA RULES SET FORTH IN:

SECTION 1 .....GENERAL RULES
SECTION 2 .....GENERAL POLICIES
SECTION 3 .....MINIMUM SPECIFICATIONS
SECTION 4 .....POINT SYSTEM
SECTION 6 .....ENGINE PROTEST RULE
SECTION 7 .....ENGINE PUMPING RULE

IN FRONT OF THIS RULE BOOK.

[1] ROLL CAGES

A. Main Cage must consist of continuous hoops, minimum of 1.5" outside diameter, minimum .095 wall thickness tubing or a minimum wall thickness .062 chrome moly tubing. Must be frame mounted in at least 6 places.

B. Must consist of a configuration front and rear hoops connected tubing on the sides or side hoops in a manner deemed acceptable by the WISSOTA inspector. Driver's head must not protrude above cage with helmet on and strapped in driver's seat. Roll cage must be securely supported and braced.

C. Low-carbon, mild steel tubing is recommended. Other materials are subject to prior approval. No iron pipe or square tubing allowed. No brazing or soldering allowed.

D. Roll cage must have a 3/16-inch inspection hole in a non-critical area.

E. Side bars must be as parallel with the ground as possible, and located perpendicular to the driver so as to provide maximum protection for the driver, but without causing undue difficulty in getting into or out of vehicle. The side bars must be welded to the front and rear of the roll cage members. No brazing or soldering allowed; must be attached to frame in at least four (4) places.

F. Door bars must be a minimum O.D.1. 5" and minimum .095 wall thickness mild steel tubing or a minimum wall thickness .062" chrome moly tubing. A fourth door bar is highly recommended. A safety vent bar is mandatory on every car. It must run from top door bar to A pillar bar. A door plate is also mandatory on every car. Door plate must be minimum 18 gauge steel, must be attached to the outside of the door bars and must go from top door bar to bottom door bar. Door plate must also run from back of driver's seat to at least five inches in front of driver's seat. Door plate can be welded or bolted to the outside of the door bars.

G. Bumper tubing must make a complete loop back to frame. Bumper may be cut off a maximum of two (2) inches outside the frame rails.

[2] CAR BODIES *Also refer to diagrams for measurements on Super Stock bodies.*

A. Eligible Models - This division is limited to 1980 through current model year American-manufactured race car bodies (Toyota Camry is also allowed).

B. Body Panels

1. Standard dirt style bodies are required. Bodies may be intermarriaged with frame. A stock-appearing Monte Carlo, Mustang, Camry, Grand Prix, Taurus, etc. style nose is required (refer to body diagram for dimensions).
2. Roof posts/sail panels can have maximum of 2" outward bow from top to bottom. Roof bead rolls/fins/supports cannot be more than 3/4" high off the flat of the roof with a maximum of five per roof.
3. Roof posts/sail panels can have no part higher than a straight line from back of roof to top of deck.
4. Front of rear sail panel/roof post can be no further forward than the back of the seat

at shoulder height.

5. Both rear sail panels/roof posts must be same shape. Front roof post can be maximum 8" at bottom to 4" on top. Aftermarket plastic manufactured molded roofs and rear roof posts/sail panels are allowed as long as they meet the class' roof, rear roof post/sail panel dimensions.
6. No "wedge" style bodies. No roof-mounted spoilers or wings. No concave body parts allowed. The right side body line must be straight from front to rear with 1" tolerance up, down, left and right on right side of car.
7. No lips allowed anywhere on the nose, body or roof.
8. All cars must have a 1.5" roll or a 90 degree angle/turn where deck and door meet. Door can be straight but must not be any higher than the deck.
9. No mirrors.
10. No part of deck lid may extend beyond the quarter panels at the rear. Maximum height of body - fenders, doors, deck lid, etc, at any point, from the ground, will be 37". No tolerance will be allowed over this measurement.
11. Nose flares/fender flares may not extend up more than 3.5" above fenders. This will be measured with a straight edge from top of flare to top of flare straight down and can't be more than 3.5" above fender or hood.
12. Driver's seat must remain in left side of car and be securely fastened to frame or roll cage. Must have headrest. Must have full-length floor pan under driver (20-gauge minimum thickness steel or .125 aluminum).
13. Door panels can be maximum of 30" from top to bottom including aluminum and plastic runner underneath.
14. No rudder allowed. A maximum 5" spoiler may be used (see spoiler diagram).
15. Protrusion of air cleaner through hood will not exceed 4".
16. Must have full stock appearing roof with all side posts intact. Roof may be made of steel, aluminum or fiberglass.
17. Rock deflector near driver's right hand may not be more than 4" high and cannot extend beyond steering wheel.
18. Leg saver guard or drive shaft hoops required as described below:
    A. Guard must mount between driveshaft and interior tin. Minimum 12-gauge steel or 3/16 thickness aluminum must run from back of the driver's seat to the foot well and must be a minimum of 15" high. Driveshaft hoop must be a minimum of 5" from U-Joint and a maximum of 9" from U-Joint.
    B. Driveshaft hoops may also be used. The first hoop must be no more than 36" from the motor plate; the second hoop must be 14" from the first hoop; and the third hoop must be 14" from the second hoop. All three hoops must be tied together with a minimum of one inch diameter tubing.

C. Interiors
1. The interior bodywork of the car may be dropped to a maximum of 3" below the top of the doors, and must also be a minimum of 11" below the roll cage.
2. If a dropped interior is used, the interior panel must fasten flush at the top of the doors and must taper gradually towards the center of the car without creating any lips. The minimum taper allowed inboard will be 8".
3. If a dropped interior is used, it must taper up, in a straight line, from driver's seat to the rear of the quarter panel/deck. Dropped interior may begin no further forward than the firewall, which in turn may be no further forward than the engine plate. At the firewall, across the center of the car, the vertical drop to the interior of the car may be a maximum of 3".
4. If interior is flat throughout the car, it must maintain a minimum clearance of 11" from the roll cage to allow for easy exit.

D. Nosepieces
1. Fender flares may not extend up more than 3.5" above fenders. Fender flares must

DIAGRAM SUPER-1

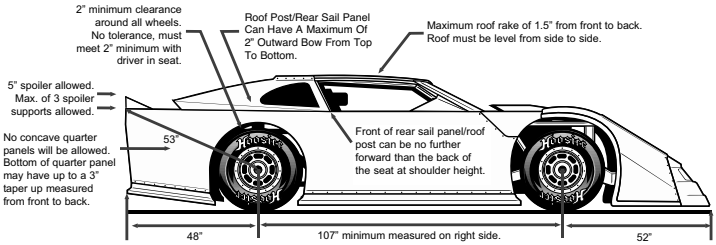

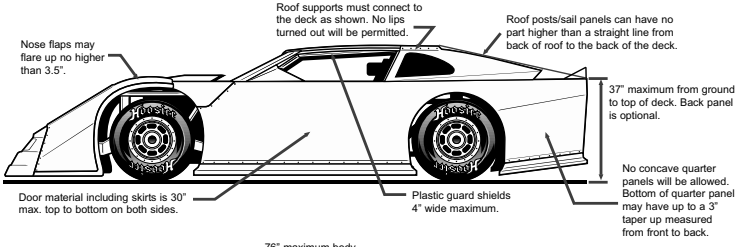

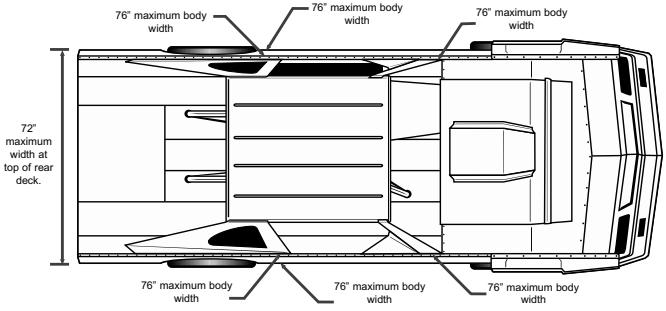

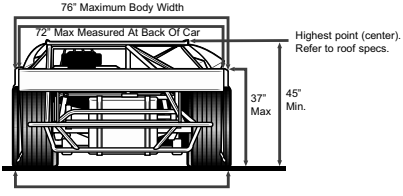

be made of flexible material. They cannot alter the original shape of the nosepiece and, if braced, must be mounted with collapsible or flexible supports.

2. Stock appearing nose must be made of molded type material. Material may not be removed from nosepiece. No cutting from top or sides. Material may be removed from center for narrowing purposes only.
3. Two-piece nose must be fastened together without any spacers to increase width.
4. Stock nosepiece may extend to a maximum of 52" from center of front hub furthest point forward, and the bottom of nosepiece must be mounted parallel to the ground (not tilted back in any way).
5. Tow hooks are strongly recommended regardless of the nosepiece used.

E. Front Fenders & Hoods
1. Must be level and flat from left side to right side of car and, at least as far back as the firewall/engine plate.
2. No part of fenders or hood may be below outside bodyline.
3. Hood must be removed from the car for technical inspection.

F. Doors
1. Top of doors, on both sides, can be no higher than 37" from ground, with a maximum materials depth of 30" including any skirts or body extensions.
2. At no point may doors break in toward center of car. No concave doors.

G. Roofs
1. Roof must be flat or stock appearing and level and must run parallel to body (see roof line drawing in diagram Super-1). Roof posts/supports are mandatory. All posts must go from roof edge to outside edge of body on both sides.
2. If body style has roof supports that have windows, window openings may be filled with clear Lexan or be left open. If Lexan is used, both roof post openings must be filled. Decal package may be used for window.
3. Both rear roof supports must be of the same shape. No lips along rear edge for roof supports will be allowed. If a break is used for support, it may be a maximum of one inch and must be turned toward the interior of the car. Both rear roof supports must be attached to the body and roof at the same point on both sides of the car. Rear roof post/sail panels can have a maximum of 2" outward bow from top to bottom.
4. Minimum roof size will be 40" long by 45" wide. Maximum roof size will be 54" long by 55" wide. No odd shape, partial or tilted roofs (see roof line in diagram Super-1). Back of roof can be curved forward a maximum of two (2) inches.
5. A maximum 1.5 inch roll turned under is allowed along the front and rear edge of the roof for support.
6. Any sun/antiglare shields in driver's side window may be a maximum of 4" deep and must be hinged for easy exit.
7. No lips of any kind may be attached to front, rear or sides of roof or roof posts.

H. Rear Quarter Panels
1. No offset quarter panels front to back.
2. Tire clearance from doors and quarter panels must be a minimum of 2" with driver in

SUPER STOCK SPOILER SUPPORT DIAGRAM

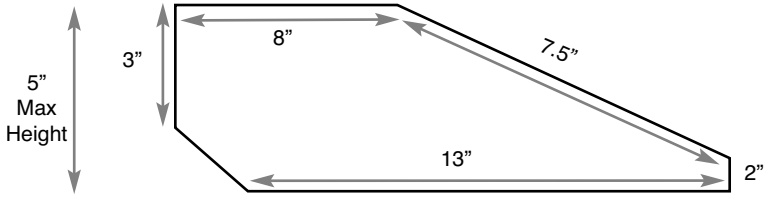

seat. Tire must be fully visible from the side. No wheel skirts.

3. At no point may quarter panels break in toward center of car. No concave quarter panels. Lips running vertical on rear edges will not be allowed.
4. Five (5) inch spoiler is allowed with a maximum of 3 spoiler supports (see diagram).
5. The top edge of the rear or the rear quarter panel, door, and front fender to the point where the fender flare attaches, must be in a straight line, within 1" tolerance, on both sides of the car.
6. The leading edge of the quarter panels must have the same measurement from top to bottom as the door panels. However, the quarter panel may be tapered toward the rear of the car up to three inches when measured from front to back.

I. Bumpers
   1. Rear of the car must be protected by a bumper securely fastened to the frame.
   2. Car must have a mandatory fuel cell nerf bar/bumper, located a maximum of 14" off the ground, which protects the rear of the fuel cell.

[3] CHASSIS AND WHEEL BASE

A. Any American car frame with a minimum wheelbase of 108 inches; a 1-inch tolerance will be allowed. If the frame/suspension you choose is not covered in the rules set forth in the WISSOTA rules, it will be your sole responsibility to prove legality of your frame/suspension.

B. Front stub may not be cut any further forward then the rear lower A-frame mount. Front stub may not be cut off further back than the front bolt of steering box.

C. All Super Stocks must weigh a minimum of 2800 lbs including the driver, after the race.

[4] SUSPENSION - FRONT AND REAR

A. Front suspension: all components must be steel unaltered O.E.M. in O.E.M. location and replaceable by O.E.M. parts. Exceptions are: tube type upper A-frames are allowed and upper A-frame mounts may be moved in or out to adjust for camber. After market upper ball joints are allowed. Lower A-frames must be stock but may be cut for shock. Lower A-frame mounts must not be altered and must be in stock location. Spindles and bottom control arms must be the same side-to-side. Bottom A-frame bushings must be in stock location. Bottom A-frame bushings must have bolt hole in the center of bushing, not an offset bolt hole. Lower ball joint may be aftermarket, but must be steel and must remain in stock location plus or minus .25". Any stock anti-sway bar may be used. Steel heim joints and steel swedge tubes are allowed on outer tie rods. Center link brace for steering is not allowed.

B. Stock passenger car hubs only. No fabricated hubs. Stock spindles and three-piece after market GM metric spindles by Speedway Motors (part number 91034501) are allowed. Intermarriage is permitted within manufacturers (GM for GM, Ford for Lincoln or Mercury) but rotors, calipers and spindles must match. On stock-finned rotors, rotors must remain stock diameter with stock calipers and stock caliper mounts. No lightening or grinding.

C. All coil springs whether front or rear suspension must be a minimum outside diameter of 4-1/2 inches. After market springs allowed. No progressive or welded springs are allowed. No spring rubbers are allowed. Spring wire diameter and coil spread must remain consistent from one end to the other and must be same outside diameter from top to bottom; last coil on each end must be closed and shaved off to create flat surfaces for mounting. Front springs must be shaved closed on top end and closed on other end. Conventional spring mounting devices only; no widgets, trick or spring-altering mounting devices will be allowed. No limiting devices are allowed on front suspension components, including but not limited in relation to: shocks, springs, upper or lower A-frames except where specific class rules allow specific alterations; the maximum amount of travel limiting material on shock shaft is one half inch; this means anything above/below the shock shaft threaded end. No fiberglass leaf springs allowed. Multiple holes allowed on front leaf spring mount. Sliders allowed in rear leaf spring mounts only. <u>Front coil springs must be 9.5" free height with 0.5" tolerance. Rear coil springs must be</u>

DIAGRAM SUPER-2

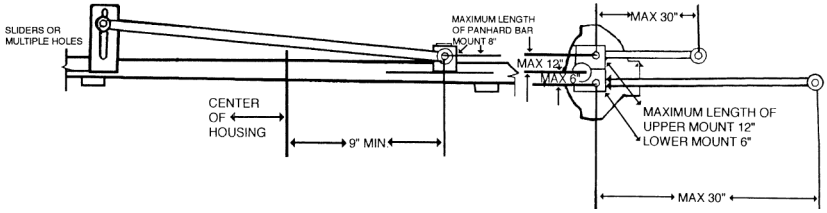

11"-16" free height with 0.5" tolerance.

D. Rear suspension: multiple holes will be allowed on rear suspension mounts. Lower and upper control arm mounts must be mounted solid to the tube. No birdcages or adjustable mounts allowed. Springs, fixed or pivoting, must be mounted on the lower control arm or the axle tube itself, and must be the same on both sides. Springs may not be mounted behind axle tube. Weight jacks are allowed. No coil-overs or coil-over eliminators of any sort allowed on front or rear of car. Steel rear suspension arms only, any bushing for upper or lower control arms may be a maximum outside diameter of 2 1/2 inches and must be round. Bushings may be made of any material. All upper and lower control arms can have only one bushing (either front or rear). One (1) shock per wheel only with a total of 4 shocks per car. No internal or external bump stops are allowed. Front side of shocks can be covered. No remote or external canister shocks allowed. No more than two-way adjustable shocks Shocks may have aluminum heims but no aluminum shocks. Aluminum shock extensions are allowed. Rear shocks must be mounted behind the rearend. No anti-sway bar may be used on the rear. No lift bars, snubber bars, J-bars or any other traction devices allowed. Panhard bar allowed on 3-link suspension only.

E. 3-link suspension: (refer to diagram) third link runs parallel with the frame, perpendicular to the axle. Panhard bar mount and upper control arm mount must be a minimum of 9 inches from the center of the housing on the right hand axle tube. Panhard bars must be mounted behind rear end.

F. Must have brakes on each wheel, this includes 4 calipers and 4 rotors (no aluminum calipers). Must be able to lock up all 4 wheels,(brake shut-off allowed on right front). Rear brakes may be drum or disc type, no floating brake caliper mounts allowed. No carbon fiber brakes (steel components only). Sixteen (16) vane rotors allowed. Slotted rotors are allowed. Front and rear rotors must be vented. Must use steel fasteners. Rear rotors must weigh a minimum of 6.5 lbs. Sliders allowed in rear leaf spring mounts only.

G. After market pedals with balance bar allowed. Proportioning valves allowed.

H. Steering: Steering box must be O.E.M. and non-lightened, and must remain in stock location and be mounted in original holes. In cockpit steering may be modified to suit driver's taste. But must be kept on the left side of the cockpit. No center steering. Solid steel steering joint mandatory in steering shaft. Boxing in of steering column not allowed. After market steering reducers/quickeners allowed. No rack and pinion steering.

[5] TIRES

A. The Hoosier WISSOTA 35W tire will be the only tire allowed on the car. There will be no defacing or altering of manufacturer identification marks or numbers on the tires. No softening or treating of tires is allowed. Siping, grinding and grooving are allowed. No tire needling.

B. WISSOTA-certified wheels only. Wheels must be stamped and stickered with WISSOTA logo. Steel wheels only: maximum 8-inch wheels; bead locks will be allowed on the right rear and right front wheels only: 3/4-inch tolerance will be allowed for bead lock. If screws are used the wheels may not exceed the 8-inch limit. No modifications allowed on wheels. Steel bead lock only. Wheel spacer and/or adapter from the rotor to the rim cannot exceed 1-inch total thickness and may be aluminum.

C. Any hard-surface wheel disc, when used, must be mounted under a bead lock or bolted-on wheel with at least three (3) bolts. No other hard-surface wheel discs allowed. Wheel spacers may not have a diameter greater than 7.25 inches, and they may only be made of aluminum. No wheel spacers made of other materials, or greater thickness or diameter, may be used. No wheel covers are allowed on left side of car.

[6] DRIVE TRAIN - TRANSMISSIONS/CLUTCHES/REAREND

A. All cars must have transmissions with working clutch
B. All transmissions with working clutch must be able to shift to forward and reverse with engine running.
C. No in or out box transmissions are allowed.
D. All cars must start and move both in forward and reverse without being pushed or pulled onto the race track.
E. No ball spline type transmission allowed.
F. All transmissions must use a stock type slip yoke drive shaft. Drive shafts must be a minimum outside diameter of 2", painted white and constructed of steel.
G. Quick change transmissions permissible.
H. Steel explosion proof bellhousing required, 270 degrees (applies only to manual transmissions), no holes allowed above the centerline of the crankshaft, starter must be in stock location. Flywheel/flexplate (ring gear) must be at least 12 inches in diameter. Flywheel/ flex plate/ring gear must be full center flywheel. No spoke, cut or altered flywheels allowed. No light weight flywheels allowed.

REAREND RULES

A. Any passenger car or truck stock appearance rear end may be used.
B. Quick change rear ends are not allowed.
C. No lightweight metal rear ends allowed including aluminum, titanium, magnesium or exotic materials, except aluminum leaf spring blocks, shackles, trailing arms with steel heim joints, and aluminum drive plates and dust caps may be used but only on Grand National rear ends. Steel rear suspension/trailing arms only. Axle tubes must be same thickness on both sides of the rear end.
D. No limited slip type rear ends are allowed.

[7] ENGINE

A. There can be a maximum of 20.5" from the center of the bottom ball joint to the front of the engine plate/engine bellhousing flange.
B. No high-performance parts. The following aftermarket crankshaft and connecting rods are allowed on all Super Stock engine options:
Chevrolet:
Eagle Rod SIR5700BBLW • Eagle Rod SIR5700BPLW
Eagle Crank 103503480 • Eagle Crank 103503480CM • Eagle Crank 103523480
Scat Crank Short P/N# 910442 • Scat Crank Short P/N# 910526
Scat Rod P/N# 35700P • Scat Rod P/N# 25700P, Scat Rod P/N 25700 and
Scat Rod P/N 35700
Ford 302:
Eagle Rod SIR5090FB • Eagle Rod SIR5090FP
Eagle Crank 103023000 • Eagle Crank 103023000-50
Ford 351W:
Eagle Rod SIR5956FP • Eagle Rod SIR5956FB • Scat Crank SCA9351W05
Chrysler 360:
Eagle Rod SIR6123CB • Eagle Rod SIR6123CP
Eagle Crank 103603580
Chrysler 318:
Eagle Rod SIR6123CB
Eagle Crank CRS103403310
The following aftermarket stock replacement steel crankshafts are also allowed:

Chevrolet: Eagle 435034805700, Scat 4-350-3480-5700, Manley 190310, Performance Engine Products (PEP) DG3182D. Ford 302: Eagle 430230015090. Chrysler: Eagle 434033106123.

If using stock connecting rods and crankshafts, they must be O.E.M. to block.

No lightening, grinding, knife edging or polishing of any type on any connecting rod or crankshaft, no coating of any crankshaft or rods, whether stock or aftermarket. No marine parts. Absolutely no strokers. Balancing is allowed. No rod cap screws allowed on stock rods. Wrist pins may float. Journals may be resized .030 max.

C. Maximum overbore: 360 Chrysler 0.40; Ford, Chevrolet, and 340 Chrysler 0.60.

D. Stock cast iron 2 or 4 barrel intake manifolds only. No after market, marine or propane intake manifolds. No fuel injected intake manifolds. Absolutely no reworked intake manifolds including No coating,painting,grinding, port matching, polishing or acid porting work on the inside of the intake manifold. A maximum of 2 external cooling lines from the back of the intake manifold running along the top side of the valve covers and entering the thermostat housing or spacer is allowed. Cooling lines cannot go to the water pump, side of the block or any other part of the assembly. Surge tank hose can enter into water pump. Surge tank cannot hold more than one half gallon of coolant and must be located in engine compartment.

E. No aluminum heads, intake manifolds or blocks allowed. No Bowtie or SVO blocks, cylinder heads or intake manifolds allowed. No other after market blocks. Heads or intake manifolds allowed unless allowed by a specific rule oulined in this rule book. Grinding in the lifter gallery is allowed. No splayed main caps or after market main caps allowed. Lifter galley vent tubes are not allowed.

F. Maximum cubic inch – Chevrolet 360.4 c.i.d, Ford 362 c.i.d. and 360 Chrysler engine will be permitted a maximum displacement of 367 c.i.d. Any flat-top pistons allowed. Stock bore and stroke. Rods must match block. Chevy rod length 5.7, Ford Cleveland rod length 5.78, Ford Windsor rod length 5.965, Chrysler 318-340 and 360 must use 6.123 length rods. GM (OEM) powered metal rods allowed, must be 5.7 in length. NO dome pistons. Stock block may be decked. Pistons may not protrude out of block on top dead center. Must be even or below block on ALL MAKES.

G. G.M. may use any production head with a maximum intake valve diameter of 1.94; maximum exhaust valve diameter will be 1.60. No angle-plug heads allowed on Chevrolet. The only aftermarket heads allowed on G.M. are the World Products S/R, no.s 4351, 4361; 1.94 intake and 1.50 exhaust, the Dart SS#10024361 with 1.94 intake and 1.50 exhaust, and the Engine Quest EQ-CH3501, 1.94 intake valves and 1.50 exhaust. Valve sizes cannot be changed. No "bowtie" or Vortec heads allowed. Vortec cast no. 10239906. Other casting numbers not allowed are 14011083 and 14096217, 10239906, 1012532, 10208890 and 12554290. No magnum head. Chrysler may use a 340 head on a 360 block. No W-2 heads allowed on Chrysler. Chrysler aftermarket EQ-CH318B with valve size 1.920 intake and 1.624 exhaust or 1.94 intake and 1.60 exhaust is allowed. For Ford, Windsor heads must match a Windsor block and Cleveland heads must match the Cleveland block. The only GT40 head castings allowed are FIZEAA and F3ZEAA. No A.R.D. heads allowed. The only aftermarket head allowed for Ford is the World Products Windsor Jr., part no. 5303, with 1.94 intake and 1.60 exhaust [casting no. 1-056]. Screw-in studs allowed. Pinning studs allowed. No roller-type or roller-tip rockers allowed. O.E.M.-type stamped steel rockers only. No roller cam. No modifications of any kind allowed on rockers except oil hole may be deburred. Rocker arm oil sprayers are not allowed. Guide plates are allowed. No stud girdles allowed. Lifter valley pan and rocker poly locks allowed. Stock diameter valve springs only. All other makes of engines must be WISSOTA-approved before they are allowed to race.

H. Any flat tappet cam allowed. No mushroom cam or lifters allowed. Lifter bores may be bushed. Lifter size must match block bead used. Lifters must be steel or iron and must be free to rotate. Oil deflector is allowed.

I. No grinding or polishing of any kind allowed on heads and intake manifolds. Valve seats may be ground no further than 1/4-inch below top of seat. Head may be milled. Push rod holes may be opened up. Block may be decked.
J. Any fan, water pump, or oil pump allowed; any type pulley allowed.
K. No dry sumps allowed. No gear drives allowed. No oil accumulators.
L. Any radiator allowed; must remain in approximate stock location.
M. Headers allowed. No weed burners. No exhaust in driver's compartment. SEE SECTION 3 UNDER MINIMUM SPEC IN FRONT OF RULE BOOK FOR NOISE SUPPRESSION RULE. [NO 180-degree headers allowed.]
N. Stock type distributor only. Billet distributor allowed. No multiple spark boxes. No magnetos or dual point distributors allowed. Any coil used must fit/must be in stock location for the cap being used. May have external coil with AdaptaCap. GM HEI distributor can be interchanged with Ford and Mopar engines. No crank trigger ignition. Distributor may be welded.
O. No after-market harmonic balancers allowed. O.E.M. stock balancers only. Balancer may be degreed but must meet size requirements below. No modifications of any kind allowed. No 283, 307 or 327 balancers allowed on any engine other than a 283, 307 or a small journal 327. Minimum size 283-307 and small journal 327 is 6-1/8 by 3/4 inch thick. 305-350 and large journal 327 minimum size is 6-3/4 by 1-3/16 inches thick. No fluid balancers. No hubs only - balancer must be two piece.
P. No titanium parts or exotic materials of any kind allowed.
Q. Minimum 3/4-inch inspection hole in side of oil pan 2-1/2 inches down from pan rail in line with a journal. Inspection hole must be easily accessible to inspector.
R. Valve timing configuration and firing order must match engine used. Example: Chevy 18436572.
S. No vacuum pump/air pump allowed.
T. Floating wrist pins are allowed.
U. No bee hive-conical type valve springs allowed. No dual valve springs allowed on Chevrolet engines.
V. No external engine oil pumps of any kind allowed.
W. Main girdle not allowed. Crank scraper not allowed. Pan scraper is allowed.
X. Deburring is allowed on engine blocks, heads and intake on the outside machined edges only, not to exceed .040 inches.
Y. You are allowed to clearance front of block under timing cover for timing chain clearance.
Z. All heads, including stock and aftermarket heads in all options, can have guide plates installed. Push tube area of heads can be opened up. Valve guide seals can be installed. You are allowed to replace valve guides but must follow stock geometry. Can use valve spring buckets/valve spring locators. Valve spring shims are allowed. Heads can be milled according to class rules and specific milling rules. Must follow all other class rules.
AA. *Car weight must be painted on upper portion of both front fenders or both front window posts in clear view of officials.*

[8] ASPIRATION - FUEL

A. Carburetor: must use stock 4412 carburetor body only. Adjustable/changeable air bleeds are allowed. No after market or billet metering blocks allowed. No floatless carburetors allowed. Must use Holley-style straight-leg or down-leg boosters only. Carburetor must be mounted with float bowl facing forward. Carburetion will be limited to one (1) stock Holley 500 CFM 2-barrel, part number 4412, with a 1-11/16-inch maximum throttle bore. No grinding or polishing of any kind allowed. All carburetor components MUST be for a 500 Holley. No milling or grinding of throttle shaft allowed; shaft must stay round. Addition of foreign material to the carburetor is not allowed for any reason. Examples include but are not limited to glue, epoxy, silicone, etc. Linkage may be welded to the end of the throttle shaft. The choke and air horn may be removed: this is the ONLY re-working allowed; must have stock measurements. Adapter plate: maximum thickness between carburetor and

intake manifold with gaskets and adapter will be one-and-three-eighths (1-3/8) inches. No devices can be added to the inside of the intake to increase or redirect the airflow.

B. Fuel may be pump gas, racing fuel or use up to E-98 Ethanol. No oxygenated fuel other than ethanol is allowed. May make changes to the carb to enable the use of ethanol, including removable air bleeds. No alcohol, no nitrous oxide or nitro, no nitrous devices allowed. No methane, no propolene oxide.

C. No electric belt driven or piston type fuel pumps. Must be stock diaphragm type fuel pump.

D. Fuel cell must be located within the vicinity of the trunk with complete metal fire wall behind driver. Mandatory is a ball check or equivalent in fuel cell.

[9] ALUMINUM

A. Aluminum or exotic metals not allowed, wheels, hubs, hats, rotors, calipers, A-frames, spindles, drive shaft, weight jacks, shocks, heim joints and trailing arms. No other aluminum suspension parts allowed.

B. Aluminum allowed: shackles, lowering blocks and aluminum heims on shocks. Aluminum roofs allowed. Aluminum radiators allowed. Aluminum pulleys, pumps and brackets in engine compartment are allowed.

[10] ENGINE PROTEST RULE: SEE SECTION 6 IN FRONT OF BOOK

[11] ENGINE PUMPING RULE: SEE SECTION 7 IN FRONT OF BOOK

2020 WISSOTA MIDWEST MOD RULES

Revised 11-19

NOTICE: PLEASE NOTE THAT THIS CLASS IS ALSO REQUIRED TO COMPLY WITH ALL WISSOTA RULES SET FORTH IN:

SECTION 1 .....GENERAL RULES
SECTION 2 .....GENERAL POLICIES
SECTION 3 .....MINIMUM SPECIFICATIONS
SECTION 4 .....POINT SYSTEM
SECTION 5.....ENGINE RULES
SECTION 6 .....ENGINE PROTEST RULE
SECTION 7 .....ENGINE PUMPING RULE

IN FRONT OF THIS RULE BOOK.

[1] ROLL CAGES

A. Main cage must consist of continuous hoops, minimum of 1.666 O.D. tubing, with a minimum wall thickness of .095, must be frame mounted in at least 6 places. A low-carbon or mild steel tubing is recommended. Other materials are subject to approval by WISSOTA. No pipe or square tubing allowed. No brazing or soldering allowed.

B. Must consist of a configuration of front, rear and top hoops connected by tubing on sides or side hoops. Drivers head must not protrude above cage with helmet on and strapped in drivers seat. Roll cages must be securely supported and braced. Foot protection bar is required. A safety vent bar is mandatory on every car. It must run from top door bar to A pillar bar. A door plate is also mandatory on every car. Door plate must be minimum 18 gauge steel, must be attached to the outside of the door bars and must go from top door bar to bottom door bar. Door plate must also run from back of driver's seat to at least five inches in front of driver's seat. Door plate can be welded or bolted to the outside of the door bars.

C. Door bars must be a minimum O.D. of 1.500 inches and a wall thickness of at least .095, a fourth door bar is highly recommended. Side bars must be as parallel with the ground as possible, and located perpendicular to the driver so as to provide maximum protection for the driver, but without causing undue difficulty in getting into or out of the vehicle. Side bars must be welded to the front and rear of the roll cage members and must be attached to the frame in at least 4 places. No brazing or soldering allowed.

D. Low-carbon mild steel tubing is recommended. Other materials are subject to prior approval. No iron pipe or square tubing allowed. No brazing or soldering allowed.

E. Bumpers must be used both front and rear . Front bumper 44" maximum width, using two parallel bars spaced no less than five (5) inches apart and a maximum of eight (8) inches apart; both bars must be completely even with each other. There may not be any square edges; all corners must be round. Front surface may be flat, NO excessive metal. [see diagram on bumper dimensions.] Pipe must be of at least 1 1/4-inch metal and must be able to support a lift by the wrecker. No body part can extend past front bumper. Front nose piece can be plastic but not lexan.

F. Rear bumpers and bars must not extend beyond width of rear tires.

G. Rear bumpers may be constructed of pipe or flat stock, but must not have any sharp edges. No excessive metal.

H. Side rub rails must be securely fastened, consisting of one or two (if desired) parallel bars. If two bars are used, they must be connected and all corners must be rounded. No sharp edges. No excessive metal.

I. Rear bumper tubing must make a complete loop back to the frame. Bumper may be cut off a maximum of two (2) inches outside the frame rails. Car must also have a mandatory fuel cell nerf bar/bumper, located a maximum of 14" off the ground, which protects the

rear of the fuel cell.

[2] BODIES

A. 1970 or newer American compact passenger car only; no panel vans or station wagons. Stock-appearing front windshield and rear window support unit; painted roll bars are not an acceptable substitute. May utilize a flat half-windshield, with no wings, mounted to the roll cage. Must have a minimum of three (3) windshield bars in front of driver.

B. Firewall and floorboard are mandatory. Fiberglass or metal duplicates of body parts are permitted. Handmade body parts may be constructed of steel, aluminum, or fiberglass. No plastic body parts allowed except for nosepiece, door runner and quarter panel runner. Body must be the same width front to rear, and parallel to the frame. No concave body parts.

C. Original roof line/rake must be maintained (see diagram MWM-1). Full size roof only, may be made from fiberglass, steel, plastic or aluminum. Must have front windshield and rear window support posts. Sail panels must be the same from side to side and may connect to the top of the spoiler in a straight line from the roof. Roof bead rolls/fins/supports cannot be more than 3/4" high off the flat of the roof with a maximum of five per roof. Any reinforcing lips on rear of sail panels must be 180 degree bends. Roof post/rear sail panel can have a maximum of 2" outward bow from top to bottom. Front of rear sail panel/roof post can be no further forward than the back of the seat at shoulder height. Aftermarket plastic manufactured molded roofs and rear roof posts/sail panels are allowed as long as they meet the class' roof and rear roof post/sail panel dimensions. May use a 2 inch spoiler on the rear of the deck; no spoiler supports are allowed other than roof post/sail panel. No other spoilers, wings or ground effects are allowed anywhere outside or inside the car. Minimum side window openings is 12 inches measured at the lowest point at the top of the window, whether roof or roll cage, to highest point at bottom of window, whether interior or body.

D. Engine compartment will remain open (no side panels). No panel in front of right door to engine compartment, no inner panels. Hood sides may have no more than a 4 inch drop. Hood must be enclosed at the rear, maximum hood scoop height is 6 inches. Door panels can be a maximum of 32 inches from top to bottom including plastic runner at bottom of door. Front doors must stop in a vertical line at or behind engine block.

E. Driver- and passenger-side windows must have at least 12-inch vertical opening.

F. No car covers or covers on suspension parts. Boot covers will be allowed on shock rods only.

G. Must have full-length floor pan under driver (20-gauge minimum thickness steel or .125 aluminum).

H. Must have minimum 2" clearance of body around circumference of all tires when car is sitting static at ride height with driver in seat.

I. Front roof post can be maximum 8" at bottom to 4" on top.

J. Nose must be flat side to side.

K. The top edge of the rear quarter panel and complete door where it joins the hood must be in a straight line, <u>front to back and left to right with 1" tolerance, on both sides of car</u>.

L. The leading edge of the quarter panels must have the same measurement from top to bottom as the door panels. However, the quarter panel may be tapered toward the rear of the car up to three inches when measured from front to back.

[3] CHASSIS/WHEEL BASE

A. Factory production complete full 1960 or newer parallel American passenger car frames only. Frames may be cut in rear only at point not further than 36 inches from center of rear-end housing. No front clips or tube-type allowed.

B. Frames may not be widened or narrowed and must be able to support roll cage on both sides. Must be full and complete both sides. Front cross member must remain intact where joined at the frame rails; center of cross member may be notched for radiator and/or steering clearance only. Frame may be notched for tie rod clearance. Top of frame may

DIAGRAM MWM-1

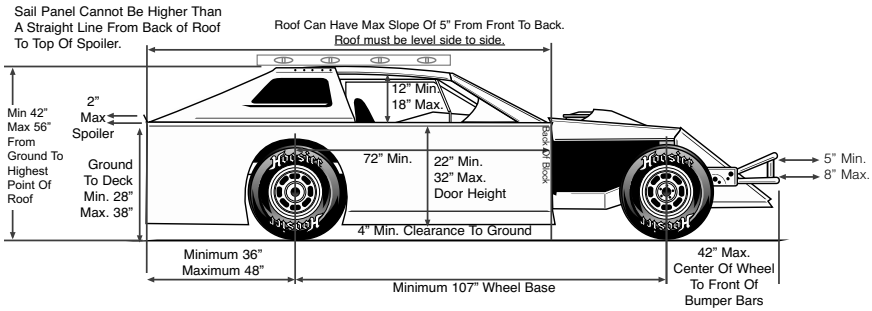

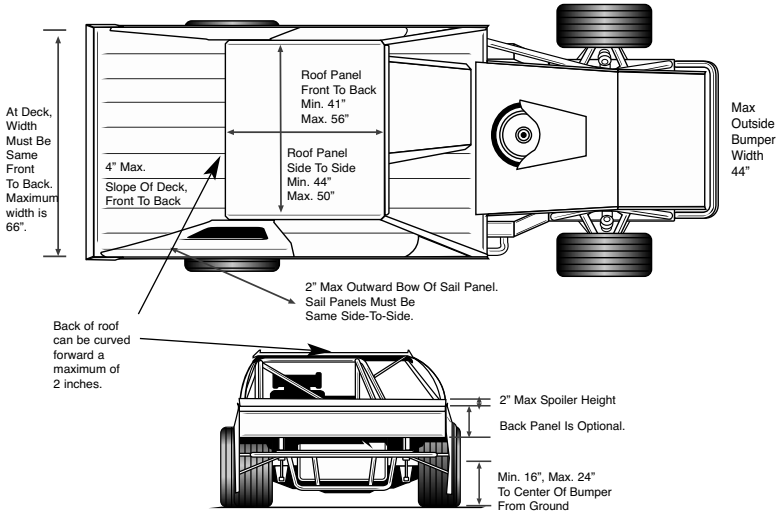

Notes Related To Diagram:

Driver's Compartment: Driver's Compartment Must Be Totally Sealed From Engine And Race Track.

Slope Of Deck: There Can Be A Maximum Of 4" Slope Of Deck Front To Back. There Can Be 2" Of Slope From Front Of Cockpit To Back Of Driver's Seat And 2" Of Slope From Back Of Driver's Seat To Rear Of The Deck. If Deck Is Level From Front Of Cockpit To Driver's Seat, You May Still Only Have 2" Of Slope From Back Of Driver's Seat To Rear Of Deck. Top Of Interior Must Be Flush With The Top Of Doors And Quarter Panels.

Escape Hatch: An Optional Escape Hatch May Be Used On Right Side Of Car By Bringing The Metal From Top Of Right Door Down To The Driver's Compartment No Higher Than 12" From The Floor Pan. Front And Rear Of Escape Hatch Must Be 90° Angle To Interior.

Doors: Front Of Doors Must Stop In Vertical Line At Or Behind The Back Of The Engine.

Left Rear Tire: Left Rear Tire May Be Partially Outside Body And Nerf Bar And Be Visible From Front, Rear And Top.

Rear Panel: Rear Panel Must Be Solid And Attach To Deck, And Must Extend To Both Quarter Panels. It Must Be Securely Fastened.

be notched for A-frame clearance. Top of spring pocket must remain. Minimum frame and body height from ground is four (4) inches (exception is front cross member).

C. No Jeep, Bronco, etc. or four-wheel-drive frames allowed. No sports car frames allowed. No front-wheel-drive allowed.

D. No raising, altering or twisting of frame rails is allowed. No moving of suspension mounts/holes. No intermingling of frame pieces.

[4] SUSPENSION

A. All front suspension components must be steel unaltered O.E.M. in O.E.M. location and replaceable by O.E.M. parts. Exceptions are: tube type upper A-frame with or without cross shaft and mounts can be moved. Aluminum top A-frame cross shafts are allowed. Weight jack must be in original center line of spring. Spindles and lower control arms must be the same from side-to-side. Three-piece aftermarket GM metric spindles by Speedway Motors (part numbers 91034511 or 91034501) and Argo AMC Pacer spindle (part number RP929) are allowed. Must use same steering arm side to side. Ford Pinto spindles are allowed. Spindles with bolt-on caliper bracket must have the caliper on the back side of the spindle. Ball joint end of the bottom A-arm can be removed for rotor clearance. Ball joint locations must follow ball joint rule. Welding a steel sleeve in the ball joint hole in the bottom A-frame is allowed. Bottom ball joints must be mounted with the pin pointed up; top ball joints must be mounted with the pin pointed down. Tie rod ends/heim joints can be mounted under the steering arm. A spacer is allowed under the steering arm. Both bottom A-frames cannot be altered or moved from stock location. Lower ball joint may be aftermarket, but must be steel and must remain in stock location, plus or minus .25 inches. Brake calipers cannot be lightened and must be OEM. Rotors cannot be lightened. Rotors may be redrilled for different bolt pattern or larger studs. No drilled lightned rotors allowed. Vented rotors only front and back. Sixteen (16) vane rotors allowed. Slotted rotors are allowed. Must use steel fasteners. Rear rotors must weigh a minimum of 6.5 lbs. Front sway bar must be O.E.M. No aluminum or fiberglass front suspension parts allowed. Steering box must be O.E.M., non-lightned, and must remain in original bolt pattern for frame being used. Center link brace for steering is not allowed. No rack and pinion steering allowed. In cockpit steering may be modified to suit driver, but must be kept on the left side of

DIAGRAM MWM-2

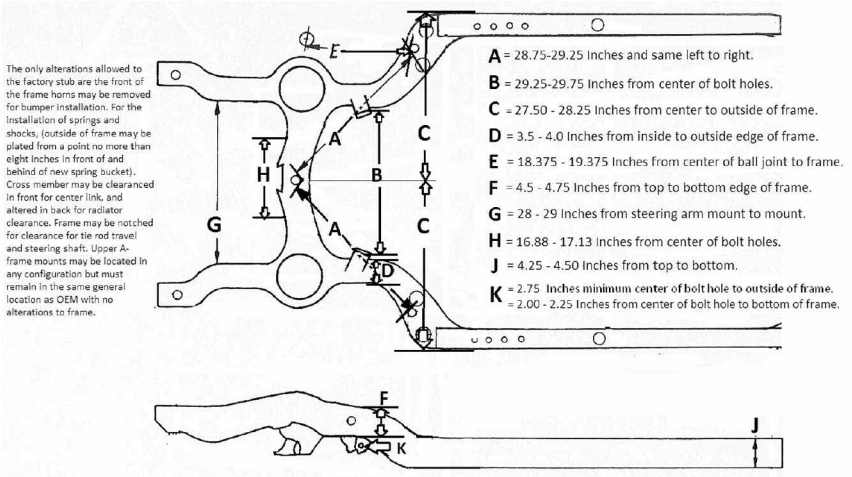

1968 - 1972 GM Chevelle Frame

cockpit. No center steering allowed.

B. Rear of frame may be altered to accept leaf or coil springs. Steel springs only. No torsion bars allowed in rear.

C. No, hydraulic, ratchet or electric weight jacks anywhere in or on car. No air shocks or air bags allowed.

D. One shock per wheel only. Front side of shocks can be covered.

E. Minimum wheel base 107 inches (no tolerance) both sides. Maximum overall width (front or rear) shall not exceed 78 inches from outside of tread to outside of tread.

F. Steel swedge tubes with steel heim joints are allowed.

G. Three link suspension rule:
Birdcages must be locked or welded to housing, unable to move. Bottom links must be 15 inches minimum length, two inch maximum length difference between left- and right-side bars. Bar angle must be visually parallel side-to-side with a five degree tolerance up and down. Bars must be mounted off the center of axle tube at the six o'clock position under axle tube, same distance down from the bottom of the axle tube. Solid arms only, no biscuits or springs. Arms and heim joints must be steel. J-Bar, panhard bar are allowed, minimum of 19 inches long, measured straight line center-to-center, and must be solid. Coil springs must be steel. Shocks and coil springs must be mounted in the same position side-to-side, may use slider or coilover kit, dummy shock/slider cannot have Schrader Valve or any other ports. Dummy shock/slider cannot have any rod force. Rear dummy shocks or sliders cannot have packers, bump stops, biscuits, or any other materials on the shaft, and springs are not allowed to have any spring rubbers attached. Coils must be 4.5 inch minimum outside diameter and must be same diameter top to bottom. No progressive or welded springs are allowed. No spring rubbers are allowed. Spring wire diameter and coil spread must remain consistent from one end to the other; last coil on each end must be closed and shaved off to create flat surfaces for mounting. Front springs must be shaved closed on top end and closed on other end. Front coil springs must be 9.5" free height with 0.5" tolerance. Rear coil springs must be 11"-16" free height with 0.5" tolerance. Conventional spring mounting devices only; no widgets, trick or spring-altering mounting devices will be allowed. No internal or external bump stops allowed. No limiting devices are allowed on front suspension components, including but not limited in relation to: shocks, springs, upper or lower A-frames (except where specific class rules allow specific alterations). Top link may have 2.5 inch outside diameter rubber or polyurethane bushing, may be up to 2.5 inches wide, must be round, bushing must be on front or back of solid link. Solid arms with two heim joints are allowed. Top link including heim joints must be steel. Top link can be no more than 6"off center of rearend housing right to left. Top link must run visually perpendicular (90 degrees) to rear end housing; top link must be straight. No floating brake brackets or lift bars allowed.

H. Leaf spring rule:
Steel multi leaf springs allowed, welded mounts to housing, same amount of leafs side to side. One shock per wheel, no other shocks. No other suspension parts allowed including coil springs, floating leafs, half leafs, mono leafs, or top springs. Aluminum lowering blocks and adjustable rear shackles allowed.

I. Shock rule:
Shocks must be steel non-adjustable. No remote or external canister type shocks allowed. Shocks can have multi-piece steel bodies. No bulb tops allowed. May have removable bushing on shaft end of body. Bearing holder/eyelet must be fixed to body. No Schrader or bladder style valves allowed. May have aluminum heim joint on shaft end. Aluminum shock extensions are allowed. No internal or external bump stops allowed. The maximum amount of travel limiting material on shock shaft is one half inch; this means anything above/below shock shaft threaded end.

[5] TIRES AND WHEELS

A. The Hoosier WISSOTA 35W tire will be the only tire allowed. No softening or treating of tires is allowed. Siping, grinding and grooving are allowed. No tire needling allowed.

B. WISSOTA certified wheels only, must have WISSOTA sticker and stamp. Steel wheels only: maximum 8-inch wheels; bead locks will be allowed on the right rear and right front wheels only: 3/4-inch tolerance will be allowed for bead lock. If screws are used, the wheels may not exceed the 8 inch limit. No modifications allowed on wheels. Steel bead lock only. Wheel spacer and/or adapter from the rotor to the rim cannot exceed 1-inch thickness. Wheel spacers may not have a diameter greater than 7.25 inches, and they may only be made of aluminum. No wheel spacers made of other materials, or greater thickness or diameter, may be used.

[6] DRIVE TRAIN, STARTERS, TRANSMISSIONS, BRAKES AND EXHAUST

Every driver must follow one of the following transmission rules (A or B below):

A. Automatic Transmission

1. All automatic transmissions must have an approved scatter shield, which must be constructed of 1/8-inch steel by 4 inches, 270 degrees around flex plate and torque converter. Four inch aftermarket SFI approved shield recommended. Aftermarket replacement bellhousings are allowed and an additional scatter shield is not required if aftermarket bellhousing is used. Flywheel/flexplate/ring gear must be full center flywheel. No spoked, cut or altered flywheels allowed. No lightweight flywheels allowed. No aluminum flywheels allowed.
2. Transmission coolers are allowed but cooler and connecting lines must be shielded from driver.
3. Driveshaft hoop is required and must be constructed of at least 1/4-inch by 2 inch steel and must be mounted no closer than 5" nor further than 9" back from the center of the front U-joint. Driveshaft must be a minimum of 2 inch diameter, steel and painted white, and must be conventional slip yoke design.

B. Open Transmission

1. Must have a working clutch and must be able to shift to forward and reverse with engine running.
2. No in or out box transmissions are allowed.
3. All cars must start and move both in forward and reverse without being pushed or pulled onto the race track.
4. No ball spline type transmission allowed.
5. All transmissions must use a stock type slip yoke drive shaft. Drive shafts must be a minimum outside diameter of 2", painted white and constructed of steel.
6. Quick change transmissions permissible.
7. Spec steel bellhousing required, part number 910-27001 for Chevrolet and Ford from Speedway Motors, unaltered. Chrysler spec bellhousing is Lakewood - Quick Time part number RM-6070, unaltered. Ford Spec steel bellhousing is Lakewood - Quick Time part number RM-6066, unaltered (applies only to manual transmissions). Starter must be in stock location. Flywheel/flexplate (ring gear) must be at least 12 inches in diameter. Flywheel/flex plate/ring gear must be full center flywheel. No spoke, cut or altered flywheels allowed. No lightweight flywheels or aluminum flywheels allowed.
8. Intermarriage of transmissions is allowed (example: Ford or Chrysler engines may use Chevrolet transmission).
9. Transmission coolers are allowed but cooler and connecting lines must be shielded from driver.

C. Starters

1. All vehicles must have the capability of starting without being pushed or pulled.
2. Starter must remain in stock location.

D. Rearends

1. Any passenger car or truck rear end maybe used. Axle tubes must be same thickness

on both sides of the rear end.

2. No quick-change devices allowed. No cambered rear ends allowed.
3. No limited slip devices are allowed. Must be a steel solid locking spool only.

E. Brakes & Exhaust

1. Brakes must be operated on all four (4) wheels and must lock up all four wheels during inspection. Right front brake shut-off is allowed.
2. Exhaust system must be mounted in such a way as to direct spent gases away from cockpit of vehicle and away from areas of possible fuel spillage.

[7] ENGINE

Cylinder Heads The following machining can be done to cylinder heads in the following engine combinations: 9.5:1 Compression Engine and WISSOTA Midwest Modified Concept Engine (this does not apply to the GM 602 Sealed Crate Midwest Modified Engine: All heads, including stock and aftermarket heads in all options, can have guide plates installed. Push tube area of heads can be opened up. Valve guide seals can be installed. You are allowed to replace valve guides but must follow stock geometry. Can use valve spring buckets/valve spring locators. Valve spring shims are allowed. Heads can be milled according to class rules and specific milling rules. Must follow all other class rules.

9.5:1 Compression Engine

A. All engines used in competition must be able to be used in conventional passenger cars. Only the motors listed in rule book allowed. No Pontiac, Buick, Oldsmobile, AMC, or other engines allowed. See section 1 general rules 1.1 general application. Castings and fittings must not be changed. No machine work on outside of engine or on front or rear of cam. No aftermarket blocks allowed. No Bowtie, SVO or any special production blocks allowed. No splayed or aftermarket main caps allowed. No turning a block that was not produced as a 4 bolt main into a 4 bolt main block. No grinding or polishing of any kind allowed to the block. The two rear oil return holes in lifter galley can have the flashing ground out of the hole only. Lifter galley vent tubes are not allowed. Grinding for clearance for cam gear is allowed on front of block.

B. No total "dry sump" systems allowed. "Wet" system must be operative and will go with engine if claimed. No external oil engine pumps of any kind allowed.

C. (1) single radiator only and must be mounted in front of engine.

D. Eligible engine CID and vehicle weight (minimum weight for all listed engines is 2600 lbs.).
Chevrolet 305, 307 & Ford 302 w/aluminum intake: (max. overbore .060")
Chrysler 318 w/aluminum intake: (maximum overbore .040")
Chevrolet 327, 350; Chrysler 340; Ford 351's: (maximum overbore .060")
Chrysler 360: (maximum overbore .040")
Chevrolet 305, 307, Ford 302, Chrysler 318 can weigh 2600 lb. minimum <u>with driver after race</u>. This may be adjusted at any time by WISSOTA Tech Committee.
No Chevrolet 302 engine components allowed.

E. All engines must not exceed 9.5 to 1 compression ratio. No intermarriage of rods or crankshafts to block allowed.
Example: 305 Chevy must run 305 rods & crankshaft
318 Chrysler must run 318 rods & crankshaft
350 Chevy must run 350 rods & crankshaft
351C Ford must run 351C rods & crankshaft

F. Crankshaft must be stock production with I.D. numbers intact or aftermarket crankshaft with approved part number only. The following aftermarket crankshaft and connecting rods are allowed on all engine options:
Chevrolet:
Eagle Rod SIR5700BBLW • Eagle Rod SIR5700BPLW
Eagle Crank 103503480 • Eagle Crank 103503480CM • Eagle Crank 103523480
Scat Crank Short P/N# 910442 • Scat Crank Short P/N# 910526

Scat Rod P/N# 35700P • Scat Rod P/N# 25700P, Scat Rod P/N 25700 and Scat Rod P/N 35700
Ford 302:
Eagle Rod SIR5090FB • Eagle Rod SIR5090FP
Eagle Crank 103023000 • Eagle Crank 103023000-50
Ford 351W:
Eagle Rod SIR5956FP • Eagle Rod SIR5956FB
Chrysler 360:
Eagle Rod SIR6123CB • Eagle Rod SIR6123CP
Eagle Crank 103603580
Chrysler 318:
Eagle Rod SIR6123CB
Eagle Crank CRS103403310
The following aftermarket stock replacement steel crankshafts are also allowed: Chevrolet: Eagle 435034805700, Scat 4-350-3480-5700, Manley 190310, Performance Engine Products (PEP) DG3182D. Ford 302: Eagle 430230015090. Chrysler: Eagle 434033106123.
If using stock connecting rods and crankshafts, they must be O.E.M. to block.
No lightening, grinding, knife edging or polishing of any type on any connecting rod or crankshaft, whether stock or aftermarket.
Stroke must match block. No altered cranks.
No lightening, grinding, knife edging or polishing of any type allowed. Balancing allowed, material removal by drilling only. No heavy metal allowed. No fluid balancers allowed (OEM balancers only). Balancer may be degreed but must meet measurements specified below. No hubs only allowed. Minimum diameter 283-307 and small journal 327, 6 1/8 x 3/4 inch thick. 305-350 and large journal 327 minimum diameter 6 3/4 x 1 3/16 thick. Resizing journals is allowed up to .030 under size.

G. GM (OEM) powdered metal rods allowed, must remain 5.7" length. Aftermarket rods allowed only if using approved part number. Rod length must match block. No grinding, polishing, sanding of rods allowed other than balancing rod ends. Maximum 3/8" bolts. No cap screws allowed on stock rods. A minimum of 3/4 inch (1" recommended) inspection hole in side of oil pan 2-1/2-inch down from pan rail in line with a journal. Inspection hole must be easily accessible to inspector; if not, the inspector may require removal of oil pan. Floating wrist pins allowed.

H. Cylinder Heads must be stock cast iron production or one of the following specified aftermarket cylinder heads: Engine Quest EQ-CH3501 (Chevrolet) or EQ-CH318B (Chrysler) or Ford World Products Windsor Jr. p/n 5303. 1987-1995 Chevrolet "Swirl port" heads allowed. Ford "302" GTP heads may be used on both the 302 & 351W. Any evidence of sanding, polishing, relieving, grinding, porting, chemical treatment or addition of material (chemical or otherwise) to the cylinder head ports or combustion chamber will cause the head to be declared illegal. Cylinder heads with multiple angle valve grinds permitted.

1. The following heads will NOT be allowed. No angle plug, bowtie, SVO, W-2, Magnum, Vortec or any other aftermarket heads allowed at any time. Some of the Chevrolet casting numbers NOT allowed include: 186, 187, 291, 414, 492, 461, 461X, 462, 432, 040, 041, 370, 10239906, 14011083, 14096217, 1012532, 10208890, or 12554290. No Gen. II heads allowed.
2. No external sanding, grinding or removal of ID numbers.
3. Any relief cuts made below the valve seat must be made using a carbide cutter (no stones) and may not exceed more than 1/4-inch below the top of the valve seat. No porting, polishing, grinding or port matching allowed at any time.
4. Stock production valve spring diameter only. No bee hive or tapered valve springs allowed. No dual valve springs allowed on Chevrolet engines.
5. Screw-in studs & guide plates allowed. Pinning of press in studs allowed.

Valley pan allowed.

6. Stock type stamped steel rocker arms only; may have oil hole deburred. No roller fulcrum or roller tip rocker arms. Rocker arm oil sprayers are not allowed.
7. No stud girdles allowed. Maximum valve sizes will not be specified. No polishing, grinding, adding of foreign material or cutting allowed to combustion chamber.
8. Deburring is allowed on engine blocks, heads and intake on the outside machined edges only, not to exceed .040 inches.
9. The following valve sizes apply for aftermarket heads: For EQ-CH3501, 1.94 intake valves & 1.50 exhaust. Valve sizes cannot be changed. Heads cannot be angle milled.
10. Chrysler engines are allowed to run the Engine Quest head EQ-CH318B with the following valve sizes: intake valve 1.920" and exhaust valve 1.624" or intake valve 1.94" and exhaust valve 1.60". These are the only valve sizes allowed on this cylinder head. No angle milling allowed.
11. Ford engines are allowed to run the Ford World Products Windsor Jr. head, valve size 1.94 intake, 1.60 exhaust, no angle milling allowed.

I. Intake Manifold:
Chevrolet 305, 307 cid: Weiand #7547, 7546 or 7547-1 aluminum intake only.
Chrysler 318 cid: Edelbrock #5076 or Weiand 7545 aluminum intake allowed.
(Note: The marketing division of Holley has replaced the Weiand brand name of some products to Team G. Be certain that you refer to the product number instead. Additional information can be found on the Holley website at www.holley.com.
Chevrolet 327, 350; Chrysler 340, 360; Ford 351 Cleveland and Windsor: only stock O.E.M. two or four barrel cast iron unaltered manifolds only. No aftermarket, marine, bowtie, SVO, W2 or any other special production intake manifolds. No throttle-body type or fuel injection intake manifolds. No propane or Chevrolet raised plenum truck intakes (casting number 14088674, 14088675) or similar intakes. May drill center intake bolt holes to match 1987-1995 Chevrolet heads. Welded heat cross over, milling, drilling bolt holes allowed.
Ford 302: Weiand #7515 aluminum intake only.

J. Hydraulic cam and lifters only. No solid or roller cams and lifters. No bushing of lifter bores allowed. Lifters must match block being used. No gear drives allowed. No coating, painting or any other work to inside of intake manifolds, heads and block lifter galley allowed. Lifters must collapse a minimum of .100", be made of magnetic material and be free to rotate. Maximum of three lifter bores may be bushed.

K. Flat top or dished pistons only; no domed pistons.

L. Distributors. Stock type distributors only. Billet distributors allowed. No multiple-spark boxes. No magnetos or dual-point distributors allowed. Any coil used must fit in stock cap and must use stock coil cover. Can have external coil with Adaptacap. GM H.E.I. distributor can be interchanged with Ford and Mopar engines. Distributor may be welded.

M. May use aftermarket headers.

N. Engine Setback, Offset and Height: The rear of the engine must be mounted at least 72" forward from the centerline of rear axle. Engine offset must be kept within 2". Engine height minimum will be 11" if measured from pan rail to ground.

O. Battery - (1) single 12 volt battery only. Dry or acid cell allowed.
Battery must be securely mounted and shielded.

P. No crank trigger ignitions allowed.

Q. No vacuum pump/air pump allowed.

R. External cooling lines: maximum of 2 lines from the back of the intake to enter into thermostat housing or spacer. No other external cooling lines allowed. Surge tank hose can enter into water pump. Surge tank cannot hold more than one half gallon of coolant and must be located in engine compartment.

S. No piston type fuel pumps allowed. Must be stock diaphragm type.

T. Midwest Modifieds valve timing configuration and firing order must match the engine used

(example: Chevrolet 18436572)

U. All engines are allowed to run a valve train oil deflector.
V. No titanium or exotic materials engine parts allowed.
W. Main cap girdle not allowed. Crank scraper not allowed. Pan scraper is allowed.
X. No oil accumulators.
Y. No coating of any crankshafts or rods allowed.
Z. Two (2) inch maximum spoiler height.

[8] ASPIRATION & FUEL:

A. Carburetion will be limited to 1 stock Holley 500 CFM 2 Barrel, part #4412 with a 1-11/16" maximum throttle bore. No grinding or polishing of any kind allowed. All carburetor components must be for a 500 Holley. Adjustable, changeable air bleeds allowed. No milling or grinding of throttle shaft allowed, shaft must stay round. No floatless carburetors allowed. Choke and air horn may be removed; this is the only re-working allowed on gasoline carburetors, all measurements must remain stock. Carburetors using ethanol may make the necessary changes to the metering block etc., but can not make any alterations that increase the performance. No other changes allowed, all measurements must remain stock. No belt driven or electric fuel pumps allowed. Must have mechanical type fuel pump mounted in OEM stock location. Replacement high-volume fuel pumps allowed but must be mechanical type. Carburetor must be mounted with float bowl forward. Addition of foreign material to the carburetor is not allowed for any reason. Examples include but are not limited to glue, epoxy, silicone, etc. Linkage may be welded to the end of throttle shaft.
B. Adapter Plate - Maximum thickness between carburetor and intake manifold with gaskets and adapter will be one and three eighths (1-3/8) inches. No devices can be added to the inside of the intake to increase or redirect the airflow.
C. The promoter or any driver has the right to claim a carburetor from any car finishing the feature race in the top four (4) positions for $125 or $25 and exchange. Add $75 if the carburetor is converted to use ethanol.
D. Driver being claimed has the option of cash or exchange; promoter claim is cash only.
E. No driver may claim more than twice in one season. No driver can claim from the same car twice in one season.
F. Carburetor must have stock 4412 bodied carburetor only. No aftermarket or billet metering block allowed.
G. You are allowed to clearance front of block for timing chain clearance.
H. No Midwest Mod can use a floatless carburetor; all carburetors must use Holley-style straight-leg or down-leg boosters.

WISSOTA Midwest Modified Concept Engine

A. Same bottom end as WISSOTA currently allows in the Street Stocks and Midwest Mods. 350 Chevy engines maximum over-bore .060.
B. Spec Icon flat top piston P/N SO2733 or SO2733LCA, or Mahle flat top piston P/N WIS50030F05, WIS50040F05, WIS50060F05, 197725130, 197725140, 197725150, or 197725160. CP flat top p/n BC1021-030W, BC1021-035W, BC1021-040W, BC1021-0345W, BC1021-060W. Must use wrist pin that comes with piston package. Must use 1.5, 1.5, 3mm ring sets. No ring spacers allowed. No tapered rings allowed. <u>No gas ported piston rings allowed</u>.
C. Steel oil pan with inspection hole.
D. No lightening of any internal or external engine parts including block.
E. Edelbrock intake P/N 2701.
F. 4 barrel carb or same carb as GM crate engine.
G. Spec 1" carburetor spacer mandatory: Speedway Motors P/N 135-1960. There can be a maximum of 3/8" total gasket material between intake and carburetor.
H. Any hydraulic cam, maximum .450 valve lift. No hydraulic roller cams allowed.

I. Stock diameter steel lifters. Lifters must collapse a minimum of .100"
J. EQ-CH3501 heads untouched. Valve size 1.94 intake 1.50 exhaust valve stem 11/32.
K. No hollow or titanium valves.
L. Minimum valve weight: intake 103 grams exhaust 87 grams .
M. Stock steel valve spring retainers. Stock diameter valve springs only. No beehive/conical valve springs allowed.
N. Stock stamped steel rockers 1.5 ratio.
O. Maximum compression 9.5 to 1.
P. Current Street Stock and Midwest Modified ignition.
Q. MSD soft touch box P/N 8728 or MSD P/N 8727CT only. Ground must be within 4 inches of box.
R. Maximum RPM 6200 limit.
S. Headers allowed, but no step or Tri-Y headers or merge collectors. No split plates, no stainless steel headers. Straight headers only. No coating headers.
T. Gas only up to 12% ethanol, no other oxygenates. No other oxygenated fuel CHP.
U. Minimum weight of 2,625 with driver in car after race, and 25 pounds in front of midplate.
V. Two (2) inch maximum spoiler height.
W. Must follow all other WISSOTA Midwest Mod rules.

GM 602 Midwest Modified Sealed Crate Engine

A. Any four barrel gas carburetor
B. Spec 1" carburetor spacer mandatory: Speedway Motors P/N 135-1960. There can be a maximum of 3/8" total gasket material between intake and carburetor.
C. Mandatory MSD soft touch box P/N 8728 or P/N 8727 CT. Ground must be within 4" of box.
D. Maximum 6200 RPM limit.
E. Straight headers only. No step headers. No merge collectors. No split plates, no stainless steel headers. No coating headers.
F. 4" spoiler maximum.
G. Minimum weight 2,550 with driver in car after race.
H. Can use same spoiler support as the WISSOTA Super Stocks. Roof post/sail panel can go from back of roof in a strait line to the top of the spoiler. Maximum 3 spoiler supports.
I. Gas only, up to E-98 ethanol allowed. No other oxygenates, no other oxygenated fuel, CHP.
J. Must follow all other WISSOTA Midwest Mod rules.

Ford 347 Concept Engine

A. Crankshafts allowed: Eagle 103023400, Pep DG302B, Scat 93023
B. Connecting rods allowed: Eagle SIR 5400CB, Scat 25400927
C. No lightening of any internal or external engine parts.
D. Piston allowed: Mahle SBF090030116, 928905903100030, 928905903100040, or 928905903100060.
E. Steel oil pan only, main girdle allowed.
F. Intake manifold allowed: Weiand p/n 7515 or Edelbrock Victor Jr. p/n 2921.
G. 4 barrel carburetor allowed. Spec 1" carburetor spacer mandatory: Speedway Motors P/N 135-1960. There can be a maximum of 3/8" total gasket material between intake and carburetor.
H. Any hydraulic cam with maximum lift of 500. No hydraulic roller cams.
I. Stock diameter cast lifters only Lifters must collapse .100. Maximum intake valve size 1.94 inches, maximum exhaust valve size 1.6 inches.
J. No hollow stem or titanium valves. Minimum valve weight: 103 grams for intake, 87 grams for exhaust.
K. Cylinder heads allowed: Ford 302 GTP, GT40 or World Products Windsor Jr 5303.
L. Steel valve spring retainers only. Stock diameter valve springs only. No conical or beehive

valve springs allowed.

M. Stock type rocker arms only with 1.6 ratio.
N. 9.5:1 maximum compression.
O. Must use same ignition as outlined in other Midwest Mod engine packages.
P. Must use MSD Soft Touch p/n 8728 or 8727CT only with a maximum RPM of 6400. Ground must be within 4 inches of box.
O. Headers allowed, but no step or Tri-Y headers or merge collectors. No split plates, no stainless steel headers. Straight headers only. No coating headers.
R. Gas only up to 12% ethanol, no other oxygenates. No other oxygenated fuel CHP.
S. Two (2) inch maximum spoiler height.
T. Must follow all other WISSOTA Midwest Mod rules.
U. Minimum weight of 2625 with driver in car after race, and 25 pounds in front of midplate.

All options subject to review/changes as deemed necessary. If rules do not specifically say you can have said part, it means you cannot have said part or alterations to said part.

FUEL & FUEL CELL

A. Racing fuel cells required and must be mounted by at least two steel straps that are at least 1/8" thick and two inches wide around cell. Fuel cells must be enclosed in metal container and must also be protected in rear of car by roll cage tubing securely mounted. No piston type fuel pumps allowed, must be stock diaphram type.
B. No part of fuel cell should be lower that protective tubing. Protected tubing should be no wider than 6 inches on both sides of fuel cell.
C. Fuel cell size: 32-gallon maximum. Fuel capacity: max. of 16 gallons recommended.
D. Fuel: (small engines) Chevy 305 & 307; Chrysler 318; Ford 302: Either pump gas, racing fuel or ethanol. The maximum amount of ethanol allowed is 98%, the minimum amount of hydrocarbon (gasoline) is 2%. Maximum percentage of methanol allowed is .5 vol. percent. No additional additives of any kind allowed.
E. Fuel: (large engines) Chevy 327, 350; Chrysler 340, 360; Ford 351W & C. All may use up to E-98 Ethanol pump gas or racing fuel. May make changes to the carb to enable the use of ethanol, including removable air bleeds. The 350 c.i. engines must still run a stock cast iron intake.
F. No nitrous oxide allowed.
G. No oxygenated fuel allowed in any engine option other than ethanol as described in the rules for that specific engine option.

[9] ALUMINUM

A. No aluminum or exotic metal wheels, hubs, hats, rotors, calipers, A-frames, spindles, drive shafts, or weight jacks. Any other aluminum or exotic metal parts other than the ones listed under letter B or C below are not allowed.
B. Aluminum parts allowed are leaf spring spacer blocks and shackles, and radiator. Pumps, pulleys and brackets in engine compartment are allowed.
C. Aluminum drive plates and dust caps may be used on Grand National rear ends only.

[10] DISPLAY OF ENGINE TYPE *All weight must be painted on upper portion of both front fenders or both front window posts. If weight is changed you may tape over for that event. You must also display the engine type you are using (examples: Spec, Concept, Crate) on both front window posts*.

[11] ENGINE PROTEST RULE: SEE SECTION 6 IN FRONT OF BOOK

Note: Any driver may protest another no matter what engine size is being used.

[12] ENGINE PUMPING RULE: SEE SECTION 7 IN FRONT OF BOOK

2020 WISSOTA STREET STOCK RULES

Revised 11-19

NOTICE: PLEASE NOTE THAT THIS CLASS IS ALSO REQUIRED TO COMPLY WITH ALL WISSOTA RULES SET FORTH IN:

SECTION 1 .....GENERAL RULES
SECTION 2 .....GENERAL POLICIES
SECTION 3 .....MINIMUM SPECIFICATIONS
SECTION 4 .....POINT SYSTEM
SECTION 6 .....ENGINE PROTEST RULE
SECTION 7 .....ENGINE PUMPING RULE

IN FRONT OF THIS RULE BOOK.

[1] ROLL CAGES

A. Main cage must be minimum of 1.5-inch outside diameter .095-inch mild steel tubing. Door bars as seen in diagram [specifications for Modifieds] are mandatory and we strongly recommend that a fourth bar be added. (Vent bars are also mandatory on both left side and right side). Must consist of continuous hoops not less than 1.5 inches outside and have a wall thickness of .095 inches. Outside of door bars must be covered by a single sheet of steel with a minimum thickness of 16 gauge. Must be securely welded on all four (4) sides to the door bars. Must also be welded to the horizontal door bars with a minimum of (3) equally spaced welds. This can be done by drilling a minimum of 1/2 inch diameter holes in the sheet steel to weld sheet to door bars.

B. Must be frame-mounted in at least six (6) places. If side rails/ bars are used, they must be flush with body. "Halo" must be a minimum 38 inches across (outside to outside) and a minimum of 29 inches deep (outside to outside). Must have a minimum of one cross bar in top of halo roll cage.

C. Must consist of a configuration front and rear hoops connected tubing on the sides or side hoops in a manner deemed acceptable by the WISSOTA inspector. Driver's head must not protrude above cage with helmet on and strapped in driver's seat. Roll cage must be securely supported and braced.

D. Low-carbon, mild steel tubing is mandatory. No iron pipe or square tubing allowed. No brazing or soldering allowed.

E. Side bars must be as parallel with the ground as possible, and located perpendicular to the driver so as to provide maximum protection for the driver, but without causing undue difficulty in getting into or out of vehicle. The side bar must be welded to the front and rear of the roll cage members. No brazing or soldering allowed, and must be attached to frame in at least four (4) places.

F. Rear bumper tubing must make a complete loop back to the frame.

[2] BODIES

A. Stock style steel bodies are allowed. Body may be interchanged with frame and manufacturer. Bodies may be stretched or shortened. No Camaro, Firebird, Mustang, T-top, convertible or pickup truck bodies allowed. No compact or sub compact car bodies allowed. Firewall and floor pan must be stock and in stock location for frame being used. Suspension must be stock for the frame being used. Must have stock roof and stock roof rake/slope for make and model of body being used. Dominator SS Camaro Street Stock nose P/N DOM-330 and Performance Bodies Mustang nose P/N 46X040 are allowed.

1. Must use stock style front bumper. May or may not have plastic cover. May be aluminum but no sharp edges allowed. Rear bumper does not have to be stock. Back of car must be completely enclosed.
2. Boxing in cockpit allowed. Must be flat and no higher than top of doors. Internal panels may be removed. Hood, trunk gussets may be removed. No cutting or

modifications allowed on outside of hood. No welding the firewall to frame. OEM rubber bushings or homemade bushings of aluminum, plastic or steel must be same size as OEM. Floorboards must run from driver's side to the passenger side and cannot be cut off any further forward than the rear of the driver's seat. For unibody floorboards, see rule 3-B Chassis and Wheel Base. Must have a fuel cell nerf bar/bumper located a maximum of 14 inches off the ground which protects the rear of the fuel cell, from frame rail to frame rail.

B. Brake and throttle pedal, steering wheel and master cylinder must be in stock location. No extensions of any kind allowed on pedals.
C. No wedges, foils, rudders, wings or pieces may be added or built that are specifically designed to deflect, trap or form a wind break of any nature. No rear spoiler. Side skirts allowed: max. 6" material with a 4" ground clearance; can be plastic, aluminum or steel.
D. Drivers seat must remain on left side of car. When the driver is in the seat, belted in, his or her shoulders can be no closer than 28" to the center of the rear axle. Seat must be securely fastened to frame or roll cage and must have headrest. No stock seats allowed, approved racing seats only.
E. No side-window enclosure.
F. Must have screen or bars in front of driver.
G. Aftermarket nose allowed: must be a minimum of eight (8) inches off the ground. Nose must look stock appearing when mounted and must be in stock location. No wedge-shaped nose allowed, no homemade nose allowed, no Super Stock or Late Model style nosepieces allowed. Plastic allowed behind front bumper and in front of rear bumper (no lexan). No air dams allowed below front bumper. No part of car can stick past or through molded nosepiece.
H. Hood scoop can start a maximum of 4" in front of air cleaner and must end no further than 4" behind air cleaner. Scoop can be a maximum of 4" wider than air cleaner on sides and can be maximum of 3" tall.
I. Rear firewall between driver and fuel cell must be made of steel or aluminum - no plastic.
J. A sun visor is allowed. It may be made of no more than 6" wide piece of material and can run from front window post to front window post.
K. Stock front bumper or plastic cover. Bumper cover must be manufactured, not home made.
L. The original firewall must be complete and have all holes covered with metal, including where the heater core fits.
M. Air ducts are allowed as long as they are through the nosepiece or below the nosepiece. They cannot be any further forward than the nosepiece and can be no wider than radiator.
N. Cars equipped with the open compression engine or regular 9.5:1 engine are allowed to have up to a 3 inch rear spoiler. Spoiler supports are not allowed. The bottom of the spoiler must attach to the trunk or rear quarter panels no more than 3 inches from the back of the car. The spoiler may be up to 3 inches in material, may only be as wide as the rear deck/trunk of the car, and must be straight side-to-side. Spoiler can be made of steel, aluminum or lexan. No part of the tail piece which encloses the back of the car can be above the trunk lid line. Cars equipped with the Concept Engine are not permitted to have a spoiler.

[3] CHASSIS AND WHEEL BASE

A. Any American-made full-frame car with a minimum wheelbase of 108 inches with a 1/2-inch tolerance is allowed. Rear frame cannot be notched or altered for brake clearance.
B. Any American-made uni-body car with a original wheel base of 110 inches minimum will be allowed with a 1/2-inch tolerance.
   1. Firewall and floorboards must remain stock and must be in stock location. Floorboards must run from firewall to rear bumper. Trunk may be cut out for fuel cell but no excessive cutting allowed. Must have complete factory stock firewall and floor. No cutting out of floor to expose frame. Front and rear frame must be tied together under floor or on top. No Super Stock-type chassis allowed.

2. Front and rear frames must be tied together. NO cutting out of floorboards or firewall to tie frames together; must be a neat and safe job. If your chassis does not pass WISSOTA technical inspection, you will not be allowed to race.

C. No maneuvering of wheelbase to meet minimum. No stretching frame, no altering of stock frame.

D. Total weight minimum of 3,200 pounds with driver after the race.

[4] SUSPENSION - FRONT AND REAR

Frames and Suspension

A. All front and rear suspension must remain stock. All suspension parts must match frame. No altering of suspension allowed. Stock passenger car hubs only. Stock spindles or aftermarket Speedway Motors 3-piece spindles allowed (part 91034501). No lightening or grinding of any suspension part allowed. No steering quickeners allowed. Stock steering components to include but not limited to drag link and stock length tie rod ends. Center link brace for steering is not allowed. No interchange of unibody, midsize metric, and big metric/steering parts. Spindles, rotors, calipers and bottom A-frames must match chassis being used. Steel lower A frame bushings are allowed. The hole must be in the center of the bushings.

B. Shock absorbers must be mounted on the stock upper and lower mounts. Shocks cannot be mounted upside-down. No modifications allowed on shock mounts, and mounts must be in stock locations. No tie rod end, heim end or aluminum shocks allowed. One shock per wheel for a total of 4 shocks per car. No coil over shocks allowed. No spacers of any kind allowed. Shocks must be steel, non-adjustable. No remote or external canister type of shocks allowed. The maximum amount of travel-limiting materials on shock shaft is one half inch; this means anything above/below shock shaft threaded end. Shocks must be steel body, one piece or multi-piece allowed. No bulb tops, may have removable bushing on shaft end of body. Bushing holder/eyelet must be fixed to body. No Schrader or bladder style valves allowed. Must use stock type shock ends top and bottom. Front half of shocks can be covered. No internal or external bump stops allowed. When rear shocks are fully extended, they cannot be longer than 25 inches from center of top mounting point to center of bottom mounting point. No internal or external bump stops.

C. Springs must be in the stock location and position; stock spring hangers only. Any 4-1/2-inch minimum diameter spring allowed front and rear. Springs must be same diameter top to bottom. No progressive or welded springs are allowed. No spring rubbers are allowed. Spring wire diameter and coil spread must remain consistent from one end to the other; last coil on each end must be closed and shaved off to create flat surfaces for mounting. Front springs must be shaved closed on top end and closed on other end. Front coil springs must be 9.5" free height with 0.5" tolerance. Rear coil springs must be 11"-16" free height with 0.5" tolerance. Conventional spring mounting devices only; no widgets, trick or spring-altering mounting devices will be allowed. No internal or external bump stops allowed. No limiting devices are allowed on front suspension components,

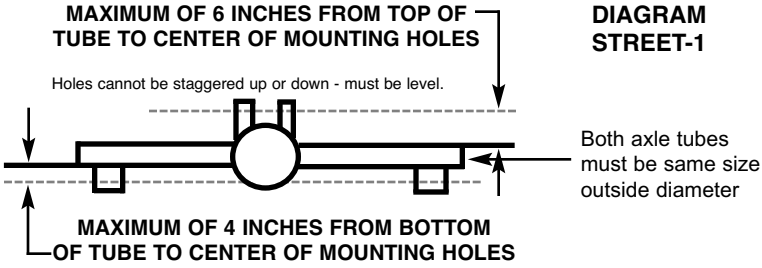

including but not limited in relation to: shocks, springs, upper or lower A-frames (except where specific class rules allow specific alterations). No adjustable shims allowed. Front spring cups may be removable but must be steel. Steel shims allowed in rear only. Rear shims may be removable; shims do not have to be welded. Must not be adjustable. No weight jacks allowed. No added traction devices allowed. Leaf springs must be stock or replacement; must use original mounts; no adjustable shackles allowed. Lowering blocks allowed on leaf spring cars only. Lowering blocks must be steel. Refer to diagram Street-1 for rearend mounting locations.

D. No aftermarket brake systems allowed. Steel components only. Brakes must be operating on all four (4) wheels and must lock up all four (4) wheels. Sixteen (16) vane rotors allowed. Slotted rotors are allowed. Must use steel fasteners. Rear rotors must weigh a minimum of 6.5 lbs. Front and rear rotors must be vented. Master cylinder can be aluminum. Steering box must be stock and must be minimum 2.5 turns from lock to lock. Lightened steering boxes are not allowed.

E. No rack & pinion steering; no independent rear suspension.

F. Tubular upper A-arms allowed. Must be steel, must have stock or stock replacement cross shaft; cross shaft may be aluminum. Stock or stock replacement 4-bolt ball joints only. Aftermarket stock length upper and lower straight non-adjustable steel rear control arms are allowed (the rest of the rear control arm rules remain the same). A-arms with bearings allowed. Steel heim joints are allowed on top A-arms. They must be non-adjustable, must be on stock or stock replacement cross shafts; cross shafts can be made of aluminum or steel. Frame mounts must be stock and in stock location (caged needle type bearings are allowed). Frame mounts must be stock and in stock location. Bottom A-frame mounts and bottom A-frame bushings must be is stock location. Bushings must have bolt hole in the center of bushing, not an offset bolt hole.

G. Aftermarket stock length upper and lower non-adjustable steel rear control arms are allowed. Stock length for chassis being used. Steel bushings are allowed on rear suspension. The bolt hole must be in center of bushing. Spherical bushings are allowed. No offset bushings allowed. Boxing of stock control arms is allowed.

H. Can use steel swedge tubes on tie rods but must use stock inner and outer tie rod ends.

[5] TIRES AND WHEELS

A. The Hoosier WISSOTA 35W tire will be the only tire allowed. Siping, grinding and grooving are allowed. There will be no defacing or altering of manufacturer identification mark or numbers on the tire. No softening, treating of tires, or tire needling is allowed.

B. Steel wheels only, up to eight (8) inches allowed. WISSOTA-certified wheels only; must have the WISSOTA sticker and stamp.

C. Bead lock allowed on the right rear <u>and right front</u> wheels. No other attachments may be made to the wheels. Compression style mud plug will still be allowed on all four wheels.

D. Oversize lug nuts allowed.

E. Wheel spacers may not have a diameter greater than 7.25 inches, and they may only be made of aluminum. No wheel spacers made of other materials, or greater thickness or diameter, may be used. Wheel spacers cannot exceed one inch in total thickness.

[6] DRIVE TRAIN

A. Transmissions

1. OEM automatic transmission only. All components must be replaceable by OEM components and in stock location. Torque converter must be a steel case functional torque converter with all elements with a minimum of 10-3/16" outside diameter. Converter must have a 1/8" drain plug on outside of converter. Converter temperature and fluid volume may be measured to ensure compliance. Converter must be as warm or warmer than transmission. Converter when drained must measure a volume no less than three (3) quarts. Cooler lines must be blocked off before draining converter for measurement. Addition of material to increase stock converter diameter is illegal. All transmissions must have an operating forward, neutral, park and reverse. All

transmissions must be able to stop and idle in gear. A functioning shifter must work and be in stock location. No lock-up type converters allowed. Automatic transmissions will not be allowed to have any wires, cables, or attachments other than shifting linkage and hydraulic fluid lines installed for cooler.

2. Intermarriage of transmissions is allowed (example: Ford or Chrysler engines may use Chevrolet transmission).
3. All transmissions may have an approved scatter shield, which must be constructed of 1/8-inch steel by 4 inches, 270 degrees around flex plate and torque converter. Four inch aftermarket SFI approved shield recommended. Aftermarket replacement bell housings are allowed and an additional scatter shield is not required if aftermarket bellhousing is used. Flywheel/flexplate/ring gear must be full center flywheel. No spoked, cut or altered flywheels. allowed. No light weight flywheels allowed.
4. Transmission coolers are allowed but cooler and connecting lines must be shielded from driver.
5. Driveshaft hoop is required and must be constructed of at least 1/4-inch by 2 inch steel and must be mounted no closer than 5" nor further than 9" back from the center of the front U-joint. No chain driveshaft hoops allowed. Driveshaft must be a minimum of 2 inch diameter, steel and painted white, and must be conventional slip yoke design.

B. Any passenger car or truck stock appearance rear end may be used. Full floating rear ends allowed. Welded spiders or steel spools only. Axle tubes must be same thickness on both sides of the rear end.
C. No lightweight metal rear ends allowed including aluminum, titanium or magnesium. Only aluminum allowed will be drive plates and dust caps on grand national rear ends.
D. All mounts must be in stock location and stock configuraton (See Diagram Street-1).
E. No multiple holes on any mount.
F. Disc brakes allowed on all rear ends.
G. O.E.M. calipers only. Steel vented rotors only. No drilled or lightened rotors allowed. Steel hats only.
H. No limited slip type rear ends are allowed.

[7] ENGINES

Cylinder Heads The following machining can be done to cylinder heads in the following engine combinations: 9.5:1 Compression Engine and WISSOTA Street Stock Concept Engine (this does not apply to the GM 602 Sealed Crate Street Stock Engine: All heads, including stock and aftermarket heads in all options, can have guide plates installed. Push tube area of heads can be opened up. Valve guide seals can be installed. You are allowed to replace valve guides but must follow stock geometry. Can use valve spring buckets/valve spring locators. Valve spring shims are allowed. Heads can be milled according to class rules and specific milling rules. Must follow all other class rules.

Open Compression Engine

No intermarriage of engines [G.M. for G.M., Ford for Ford, etc., only]. No Pontiac, Oldsmobile, AMC or other engines allowed. See section 1 general rules, 1.1 general application.

A. No aluminum or aftermarket blocks allowed. No splayed or aftermarket main caps allowed. No turning a block that wasn't produced as a 4 bolt main into a 4 bolt main block. No grinding or polishing of any kind allowed to block. The two rear oil return holes in lifter galley can have the flashing ground out of the hole only. Lifter galley vent tubes are not allowed.
B. All cars must be equipped with an engine with a stock stroke. No intermingling of crankshafts, rods or pistons to change stroke. Crankshaft and connecting rods must be O.E.M. to block with no lightening, grinding, knife edging or polishing of any type. Aftermarket rods or crankshaft allowed by specific part number only. The following aftermarket crankshaft and connecting rods are allowed in all engine options:

Chevrolet:
Eagle Rod SIR5700BBLW • Eagle Rod SIR5700BPLW
Eagle Crank 103503480 • Eagle Crank 103503480CM • Eagle Crank 103523480
Scat Crank Short P/N# 910442 • Scat Crank Short P/N# 910526
Scat Rod P/N# 35700P • Scat Rod P/N# 25700P, Scat Rod P/N 25700 and Scat Rod P/N 35700
Ford 302:
Eagle Rod SIR5090FB • Eagle Rod SIR5090FP
Eagle Crank 103023000 • Eagle Crank 103023000-50
Ford 351W:
Eagle Rod SIR5956FP • Eagle Rod SIR5956FB
Chrysler 360:
Eagle Rod SIR6123CB • Eagle Rod SIR6123CP
Eagle Crank 103603580
Chrysler 318:
Eagle Rod SIR6123CB
Eagle Crank CRS103403310
The following aftermarket stock replacement steel crankshafts are also allowed: Chevrolet: Eagle 435034805700, Scat 4-350-3480-5700, Manley 190310, Performance Engine Products (PEP) DG3182D. Ford 302: Eagle 430230015090. Chrysler: Eagle 434033106123.
If using stock connecting rods and crankshafts, they must be O.E.M. to block.
No lightening, grinding, knife edging or polishing of any type on any connecting rod or crankshaft, whether stock or aftermarket.
No marine parts. Absolutely no strokers. Balancing is allowed. No aftermarket harmonic balancers allowed. Stock balancers only. Balancer may be degreed but must meet measurements below. No modifications of any kind allowed. No 283, 307 or 327 balancers allowed on any engine other than a 283, 307 or small journal 327. Minimum size 283-307 and small journal 327 is 6-1/8 by 3/4 inch thick. 305, 350 and large journal 327 minimum size is 6-3/4 by 1-3/16 inch thick. No fluid balancers. No hubs only - balancer must be two piece. Floating wrist pins allowed. No rod cap screws allowed on stock rods.

C. The maximum engine over bore permitted will be .040 on the 360 Chrysler engine. On Chevrolet, Ford and 340 Chrysler, the maximum over bore permitted will be .060. Stock-type flat top or dished pistons only. Pistons must be below deck on all engines.
   1. Chevrolet engines will be permitted a maximum displacement of 360.4 c.i.d.
   2. Ford engines will be permitted a maximum displacement of 362 c.i.d.
   3. 360 Chrysler engines will be permitted a maximum displacement of 367 c.i.d.

D. Distributors. Stock type distributors only. Billet distributors allowed. No multiple-spark boxes. No magnetos or dual-point distributors allowed. Any coil used must fit in stock cap and must use stock coil cover. GM H.E.I. Distributor can be interchanged with Ford and Mopar engines. May have external coil with Adaptacap.

E. Stock cast iron two or four barrel intake manifolds only. No aftermarket, marine, propane, throttle body or fuel injected manifolds. No raised plenum truck manifolds. Absolutely no reworked intake manifolds. No coating, painting, grinding, port matching, polishing or acid porting work in the inside of the intake manifold. Center intake bolt holes may be drilled to match 1987-1995 Chevrolet heads.

F. Cylinder heads O.E.M. only; no angle milling allowed.
   1. No angle plug, Vortec or camelback heads or comparable camelback heads allowed on Chevrolet. Some of the casting numbers not allowed include: 186, 187, 414, 492, 461, 461X, 462, 432, 041, 040, 040, 370, 10239906, 14011083, 14096217, 10125320, 10208890, 12554290. Also, no A.R.D. heads, no GT40 or magnum heads allowed.

2. No Bowtie, SVO, W2 or any other aftermarket heads allowed at any time.
3. No porting, polishing, grinding or port matching allowed at any time. Valve seats may be ground no further than 1/4-inch below top of the seat.
4. Valve size must match head being used. No 2.02 intake valves on Chevrolet or Chrysler. No 1.6 exhaust valves.
5. Stock ratio rockers only; no fulcrum roller or roller-tipped rockers allowed. No stud girdles allowed. Guide plates allowed. Stamped steel rockers only. No modifications of any kind allowed on rockers except oil hole may be deburred. Valley pans allowed. Rocker arm oil sprayers are not allowed.
6. Valve springs must be the stock diameter for the cylinder head being used.
7. Engine must have stock rubber mounts or steel mounts and must be in stock location for the type of engine being used. Must be eight (8) cylinder.
8. No titanium parts of any kind allowed.
9. Deburring is allowed on engine blocks, heads and intake on the outside machined edges only, not to exceed .040 inches.

G. Camshafts
1. Hydraulic camshafts and lifters only. No roller cams or roller lifters allowed. No mushroom or step lifters allowed. No machining permitted to install cam or lifters. Must be able to remove lifter from top of lifter galley at any time. Bushing of lifter bores is not allowed. Lifters must be steel or iron and must be free to rotate.
2. Any timing chain allowed. No gear drives allowed. Valve timing configuration and firing order must match engine used. Example: Chevy 18436572.

H. Stock cast iron exhaust manifolds only. No center-dump manifold or LT1 manifold allowed. Manifold exit must measure under 2.25" cold, which means the following Chevrolet casting numbers, as well as others not listed, will not be allowed: 10168494, 10168495, 10168496, 12524289, 10108700 and 10168544. Stock replacement exhaust manifolds allowed for cast iron stock manifolds currently allowed by the rules. No other aftermarket or reworked manifolds allowed. No headers allowed.

I. One (1) radiator only; must be in stock location. Aluminum radiator allowed.

J. No crank trigger ignitions allowed.

K. No vacuum pump/air pump allowed.

L. No bee hive-conical type valve springs allowed. No dual valve springs on Chev. engines.

M. External cooling lines maximum of 2 lines from the back of the intake to enter into thermostat housing or spacer. No other external cooling lines allowed. Surge tank hose can enter into water pump. Surge tank cannot hold more than one half gallon of coolant and must be located in engine compartment.

N. All engines are allowed to run a valve train oil deflector.

O. No coating, painting or any other work to inside of intake manifolds, heads and block lifter galley allowed. No coating of any crankshaft or rods is allowed.

P. Lifters must collapse a minimum of 100 thousands and be made of magnetic material.

Q. No external engine oil pumps of any kind allowed.

R. Starter must be in stock location.

S. Main cap girdle not allowed. Crank scraper not allowed. Pan scraper is allowed.

T. Minimum 3/4" inspection hole required in the side of the oil pan 2-1/2" down from pan rail in line with a journal. Inspection hole must be easily accessible to inspector.

U. One 12 volt battery only allowed.

V. No oil accumulators.

W. You are allowed to clearance front of block for timing chain clearance.

WISSOTA Street Stock Concept Engine

A. Same bottom end as WISSOTA currently allows in the Street Stocks & Midwest Mods. 350 Chevy engines maximum over-bore .060.

B. Spec Icon flat top piston P/N SO2733 or SO2733LCA, or Mahle flat top piston P/N

WIS50030F05, WIS50040F05 or WIS50060F05, 197725130, 197725140, 197725150, or 197725160. or CP flat top p/n BC1021-030W,
BC1021-035W, BC1021-040W, BC1021-0345W, BC1021-060W. Must use wrist pin that comes with piston package. Must use 1.5, 1.5, 3mm ring sets. No ring spacers allowed. No tapered piston rings allowed. No gas ported piston rings allowed.

C. Steel oil pan with inspection hole.
D. No lightening of any internal or external engine parts including block.
E. Edelbrock intake P/N 2701.
F. 4 barrel carb or same carb as GM crate engine.
G. Spec 1" carburetor spacer mandatory: Speedway Motors P/N 135-1960. There can be a maximum of 3/8" total gasket material between intake and carburetor.
H. Any hydraulic cam, maximum .450 valve lift. No hydraulic roller cams allowed.
I. Stock diameter steel lifters. Lifters must collapse a minimum of .100".
J. EQ-CH3501 heads untouched. Valve size 1.94 intake 1.50 exhaust valve stem 11/32.
K. No hollow or titanium valves.
L. Minimum valve weight: intake 103 grams exhaust 87 grams .
M. Stock steel valve spring retainers. Stock diameter valve springs only. No beehive/conical valve springs allowed.
N. Stock stamped steel rockers 1.5 ratio.
O. Maximum compression 9.5:1.
P. Current Street Stock and Midwest Modified ignition.
Q. MSD soft touch box P/N 8728 or MSD P/N 8727CT only. Ground must be within 4 inches of box.
R. Maximum RPM 6200 limit.
S. Stock exhaust manifold - no headers.
T. Gas only up to 12% ethanol, no other oxygenates. No other oxygenated fuel CHP.
U. Must follow all other WISSOTA Street Stock rules.

GM 602 Street Stock Sealed Crate Engine

A. Four barrel gas carburetor allowed. No floatless carburetors allowed.
B. Spec 1" carburetor spacer mandatory: Speedway Motors P/N 135-1960. There can be a maximum of 3/8" total gasket material between intake and carburetor.
C. Mandatory MSD soft touch box P/N 8728 or P/N 8727 CT. Ground must be within 4 inches of box.
D. Maximum 6200 RPM limit.
E. No headers allowed. Must use same exhaust as all other WISSOTA Street Stock engine combinations.
F. Minimum weight 3200 lbs. with driver after race.
G. Gas only, up to 12 percent ethanol. No other oxygenates, no other oxygenated fuel, CHP.
H. Must follow all other WISSOTA Street Stock rules.

All engine options subject to review/changes as deemed necessary. If rules do not specifically say you can have said part, it means you cannot have said part or alterations to said part.

[8] ASPIRATION AND FUEL

A. Carburetion will be limited to one (1) stock Holley 500 CFM 2- barrel, part no. 4412, with a 1-11/16-inch throttle bore. No grinding or polishing of any kind allowed. No floatless carburetors allowed. All Street Stock carburetors must use Holley-style straight-leg or down-leg boosters only. All carburetor components must be for a 500 Holley. Adjustable, changeable air bleeds allowed. No milling or grinding of throttle shaft allowed. Shaft must stay round. Choke can be removed but NOT the air horn. Must have stock measurements. Addition of foreign material to the carburetor is not allowed for any reason. Examples include but are not limited to glue, epoxy, silicone, etc. Linkage may be welded to the end of throttle shaft.

B. Adapter plate for open compression engine: may use a one inch open 4-barrel spacer with a one inch high performance 2-barrel spacer on top of it. Spacer may be tapered. A total of 1/2" of maximum total gaskets may be used between intake and carburetor.
   1. Devices below carburetor designed to increase the flow of air are not permitted. No devices can be added to the inside of the intake to increase or redirect airflow.
   2. All air entering the engine will be required to enter through top of the carburetor.

C. Fuel: race fuel is allowed. May use up to E-98 Ethanol. May make changes to the carb to enable the use of ethanol, including removable air bleeds.

D. No electric fuel pumps allowed. No belt-driven fuel pumps allowed.

E. Carburetor must be mounted with float bowl forward. Carburetor must have stock 4412 bodied carburetor only. No aftermarket or billet metering block allowed. No piston type fuel pumps allowed. Must be stock diaphragm type.

F. No oxygenated fuel allowed in any engine option other than ethanol as described in the rules for that specific engine option.

[9] ALUMINUM

A. No aluminum or exotic metal suspension, body or drive train parts allowed. Aluminum radiators allowed. Aluminum pumps, pulleys and brackets in engine compartment are allowed.

[10] DISPLAY OF ENGINE TYPE *All weight must be painted on upper portion of both front fenders or both front window posts. If weight is changed you may tape over for that event. You must also display the engine type you are using (examples: Spec, Concept, Crate) on both front window posts*.

[11] ENGINE PROTEST/TEARDOWN PROCEDURE: SEE SECTION 6 IN FRONT OF BOOK

[12] ENGINE PUMPING RULE: SEE SECTION 7 IN FRONT OF BOOK

2020 WISSOTA MOD FOUR RULES

Revised 11-19

NOTICE: PLEASE NOTE THAT THIS CLASS IS ALSO REQUIRED TO COMPLY WITH ALL WISSOTA RULES SET FORTH IN:

SECTION 1 .....GENERAL RULES
SECTION 2 .....GENERAL POLICIES
SECTION 3 .....MINIMUM SPECIFICATIONS
SECTION 4 .....POINT SYSTEM
SECTION 6 .....ENGINE PROTEST RULE
SECTION 7 .....ENGINE PUMPING RULE

IN FRONT OF THIS RULE BOOK.

[1] ROLL CAGES

A. The frame is defined as the center of the front ball joint to the rear of the roll cage (minimum). Brackets for front of leaf springs or front of lower control arms must attach to square tubing.
B. Frame components must be a minimum of 14-gauge, 2" X 2" square tubing or 14-gauge 1-1/2" X 2-1/2" rectangular tubing. No round tubing may be used in the frame.
C. The main four points of the roll cage must be constructed of minimum 1-1/2" outside diameter X 13-gauge wall round tubing [see drawing].
D. The side exit openings must be a minimum of 12" high and a maximum of 20" high.
E. All T-welds in driver's compartment must be gusseted.
F. There must be foot/leg protective bars incorporated into the roll cage.
G. A bar diagonally across the top of the roll cage is required.
H. Full length floor panel must be constructed of minimum 18-gauge steel or 1/16" thick aluminum. Leg guard or panel between drivers seat and drive shaft, starting at back of foot well to the back of the drivers seat must be a minimum of 18 gauge steel or 1/16" aluminum.
I. A firewall separating the driver's compartment from the fuel tank, engine and radiator is mandatory.
J. Bumpers and nerf bars may not have any sharp corners. Car must also have a mandatory fuel cell nerf bar/bumper, located a maximum of 14" off the ground, which protects the rear of the fuel cell.
K. A safety vent bar is mandatory on every car. It must run from top door bar to A pillar bar. A door plate is also mandatory on every car. Door plate must be minimum 18 gauge steel, must be attached to the outside of the door bars and must go from top door bar to bottom door bar. Door plate must also run from back of driver's seat to at least five inches in front of driver's seat. Door plate can be welded or bolted to the outside of the door bars.

DIAGRAM M4-1

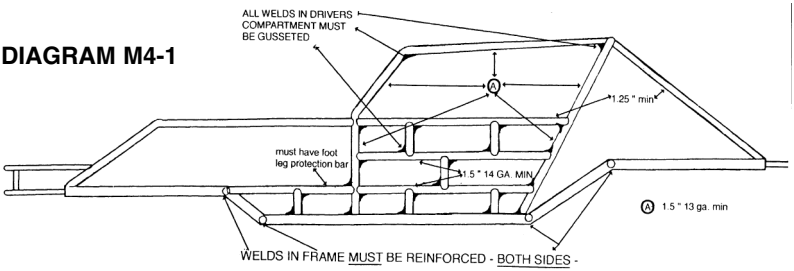

1. Front Bumper:
   A. Must be constructed of minimum 1" outside diameter X 13-gauge tubing.
   B. Must be double tube-type with a minimum of 5" separating outside to outside.
   C. Horizontal tubes must be parallel, both in the horizontal and vertical planes.
   D. Must be a maximum 40" width outside measurement.
   E. Must be attached to frame.
   F. Lower tube must be a minimum of 13" from ground, outside measurement.
   G. Upper tube must be a maximum of 22" from ground, outside measurement.
   H. Maximum 30" from ball joint to outside of bumper.
   I. Cannot be more than 12" from end of nosepiece measured at frame height (see drawing).
2. Rear Bumper:
   A. Must be constructed of minimum 1" outside diameter by 13 gauge round steel, or can be constructed of 1"X 1" X 13 gauge square tubing.
   B. Rear bumper using complete loops back to the frame cannot extend more than 2" beyond the width of the rear tires. If loops are not used, the bumper must be cut off at a maximum of 2" outside the frame rail.
   C. Rear bumper must extend 2" minimum behind the rear of the rear quarter panels.
3. Nerf Bars:
   A. No sharp edges or corners allowed.
   B. Left side nerf bar may be no more than 2" from body if tire is flush with body. Nerf bar must be mounted no more than 6" from each end.
   C. Right side nerf bar is required on car. May extend 2" max. beyond outside of tires.

[2] BODIES

A. Roof height is 42" minimum measured from the ground. Roof bead rolls/fins/supports cannot be more than 3/4" high off the flat of the roof with a maximum of five per roof.
B. Rear quarter panel length measured from center line of rear axle housing to rear of body must be a minimum of 28" and a maximum of 40".
C. Wheel opening must have a 2" minimum clearance around circumference of rear tires when sitting static at ride height with driver in seat.
D. Door height must be a minimum of 22" and a maximum of 30". This is to be measured in a straight line down and includes all metal, plastic and angles.
E. On front door panels, the bottom of door panel can extend up to 10" forward of the top panel. Door panels may not extend further back than the #4 spark plug. Door placement must be the same on both sides of the car.
F. All body components must be a minimum of 4" off the ground. No concave body parts.
G. Deck must be the same width front to rear and parallel to the frame. The deck may be no higher than the body side panels and no more than 3" below the door panels at any point. The maximum body width allowed is 64" at the deck. Doors and quarter panels may bow outward a maximum of 4" on each side at the middle of the panel. The maximum deck height is 38" measured up from the ground with the driver in the seat. <u>The right and left side of body line must be in a straight line from front to rear, with a 1" tolerance up, down, left and right on both sides of car.</u>
H. There can be a maximum 6" slope of deck from front to back. There can be 3" of slope from front of cockpit to back of driver's seat and 3" of slope from back ot driver's seat to rear of the deck. If front deck is level, there can still only be 3" of slope from driver's seat to rear of deck.
I. Two inches of roof rake is allowed for every 24" of roof length, measured front to rear. Back of roof may be curved forward a maximum of two (2) inches.
   On a curved roof, this will be measured with a 4 ft. level. Must have maximum 2" clearance at rear of roof and a maximum of 4" clearance at the front of the roof.
J. A sun visor may be mounted at the top of the windshield opening, from front window post to front window post, but must not exceed 6" in height.

K. May use a 5" maximum spoiler on the rear deck. Rear spoiler supports may be a maximum of 6" tall and 13" long measuring from base of the spoiler forward. Must taper down to a maximum of 2" tall at the front of the spoiler support. May be 6" tall for a maximum of 8" forward from the top of the spoiler, then taper down to 2" at front of spoiler support. This will be measured with a template. Maximum of three (3) spoiler supports. If you use sail panels for supports, you can have one additional spoiler support. No other spoilers, wings or ground effects are allowed anywhere outside or inside the car except for on the nosepiece side panels.

L. Sail panels must match roof line at the top but can be up to 6" tall above the rear deck at the back of the deck and the rear can be built at a 45 degree angle maximum away from the rear deck end. The spoiler must remain at 5" maximum above the deck. Sail panels can have a maximum 2" outward bow from top to bottom. Sail panel top edges can have a gradual curve upwad from rear edge of roof to the rear end of the panel not to exceed 3" above a straight line from rear edge of roof to the top rear corner of the sail panel.

M. Window openings must be the same on both sides of the car. Side windows must be open. There must be bars or screen in front of driver. Lexan rear quarter windows are allowed. No open quarter windows allowed.

N. The front nose piece shall have a maximum width at any point of 36" and the nosepiece and fins can be no further back than the front of the radiator. Two nosepiece fins may be mounted, one on each side, but cannot exceed 2" above the nosepiece at any point. Nose piece must be inside of bumper in front and on sides. The rear of the hood must be enclosed. Engine sides may be covered with body panels.

O. No plastic body parts except for nosepiece, door and quarter panel runners and protection for master cylinders, reservoirs and electronics at left front of foot well area.

P. The leading edge of the quarter panels must have the same measurement from top to bottom as the door panels. However, the quarter panel may be tapered toward the rear of the car up to three inches when measured from front to back.

Glossary

Various terms are used in this guide which are defined as follows. Unless otherwise specified, this is the only definition to be used.

Pony Car - The following are the only ones considered pony cars:

General Motors: Monza, Vega, Chevette, Astro, Skyhawk, Starfire, Sunbird

Ford/Mercury: Bobcat, Capri, Pinto, Mustang II and 1979 to 1993 Mustang AMC: Spirit

[3] CHASSIS AND WHEEL BASE

A. Wheel base must be a minimum of 90" and a maximum of 97" measured from center of lower ball joint to center line of rear axle housing.

B. Front end must be a O.E.M. clip from an American-made pony car.

C. Front-end width as measured at cross member may not be altered.

D. The minimum weight of the car with driver after the race must be 1700 pounds.

[4] SUSPENSION - FRONT AND REAR

A. Frames and Suspension

1. No fiberglass leaf springs.
2. Only one (1) shock absorber per wheel. No remote or external canister type shocks allowed. Front half of shocks can be covered.
3. Rear shocks must be attached to rear end and frame [no linkages].
4. No aluminum body shocks. No more than two-way adjustable shocks.
5. Rear weight jacks allowed.
6. No cockpit-adjustable rear weight jack allowed. No cockpit-adjustable shocks
7. Rear trailing arms, panhard bar, lift bar or pull bar may have steel heim joints. Must be mounted in stock configuration. Trailing arms can be no shorter than 14 inches and no longer than 20 inches. Must be within one INCH in length of each other; arms may be adjustable. Sliders are allowed for leaf spring mounting.
8. No coil-over shocks; no coil-over unit or torque-absorbing device on third link or lift

bar other than rubber bushings. Coil springs must have minimum outside diameter of 4-1/2 inches. No progressive or welded springs are allowed.
No spring rubbers are allowed. Spring wire diameter and coil spread must remain consistent from one end to the other; last coil on each end may be closed and shaved off to create flat surfaces for mounting. Rear coil springs must be 11"-16" free height with 0.5" tolerance. Conventional spring mounting devices only; no widgets, trick or spring-altering mounting devices will be allowed. No internal or external bump stops allowed. No limiting devices are allowed on front suspension components, including but not limited in relation to: shocks, springs, upper or lower A-frames (except where specific class rules allow specific alterations).

9. Mounting brackets and control arms may be interchanged between different model differentials. Rear-end mounting brackets may be relocated.
10. No floating suspension components or bird cages.
11. Steel adjustable spring shims are allowed on top of front springs.
12. Strut rods – Soft tubing can be welded into the shaft part of the strut rod but must have stock rubber bushings at frame end and must retain original control arm end. Cutting off the front bolt area is not allowed. Must remain OEM length.
13. Front shock absorbers must be mounted in the O.E.M. bottom mounts and in the O.E.M. location for the cross member being used.
14. All front suspension components must be O.E.M. and unaltered for the front cross member being used. Spindles, steering arms, "A" arms, and steering components may NOT be lightened, bent, shortened or altered in any way.
15. Upper "A" arms may be mounted in any location. Lower "A" arms must be mounted in O.E.M. mounts and in the O.E.M. location for cross member. Bottom A-frame bushing must have bolt hole in center of bushing, not an offset bolt hole.
16. Front sway bars allowed. Must be stock O.E.M. to cross member with stock mounting; can be mounted front or rear of cross member.
17. Intermarriage of spindles, steering arms, strut rods, hubs, "A" arms and steering components is permitted only within O.E.M; must be GM to GM, Ford to Ford.

B. Steering

1. In-cockpit steering may be modified to suit driver's taste, but must be kept on the left side of the cockpit. No center steering.
2. Solid steering joint recommended.
3. No boxing-in of steering column.
4. A quick-release steering wheel is required.
5. A steering quickener is recommended but must pass safety inspection.
6. Steering wheel must be 13" minimum diameter.

C. Brakes

1. All brakes must be stock (any stock production) components after master cylinder; no proportioning valve or no shut-off valve. Residual pressure valve is allowed. No aluminum components after master cylinder except residual pressure valve
2. Front brakes must match crossmember being used. Brake and hub assemblies must be the same type on left and right front wheels. May use stock GM metric brake calipers on front end.
3. Disc brakes allowed on rear.
4. Brakes must be capable of locking three (3) wheels on dry dirt. Must have brakes on three (3) wheels. All three calipers must work when braking.
5. One (1) master cylinder only.
6. Master cylinder may be an aftermarket model.
7. No brake floaters. Dual master cylinders are allowed; if running dual master cylinders, no balance bar allowed, and must have working brakes on all four corners of the car.

D. Shocks

1. Shocks must be steel non-adjustable. No remote or external canister type shocks allowed. Shocks must be one-piece steel body. No multi-piece bodies or bulb tops allowed. May have removable bushing on shaft end of body. Bearing holder/eyelet must be fixed to body. No Schrader or bladder style valves allowed. May have aluminum heim joint on shaft end. No internal or external bump stops allowed. The maximum amount of travel-limiting materials on shock shaft is one half inch.

[5] TIRES AND WHEELS

A. Tires
1. Dirt: Hoosier Dirt Stocker or Super Dirt Stocker A-60x13; B-60x13; P-225/60D-13; P-195/65D-13; P-185/65D-13.
2. Siping and grooving tires is allowed. No tire needling allowed.

B. Wheels
1. Wheels must be steel and a maximum of seven (7) inches wide.
2. Right front wheel must be reinforced or a race-approved wheel.
3. Bead-lock wheels are allowed on the right rear <u>and right front only</u>.
4. No lightweight wheels or oversized wheels which have an increased circumference of the bead flange. Minimum weight of a race wheel is 12 pounds.

[6] DRIVE TRAIN

A. Transmissions
1. One (1) 360-degree steel drive shaft hoop of sufficient strength to contain the drive shaft is required.
2. Any pony car transmissions allowed. All gears must work; must have working reverse.
3. The car must have a working clutch and must have working starters in stock location.
4. No aluminum flywheels or drive shafts. All drive shafts must meet a minimum specification of 2" outside diameter and must be of conventional slip yoke design.
5. Hydraulic throw-out bearing not allowed.
6. No automatic transmissions.
7. No button.
8. A 1.5" inspection hole shall be drilled in the bell housing which must be accessible for the tech inspector to see the clutch, flywheel, pressure plate, etc.
9. An explosion-proof bell housing or steel scatter shield is mandatory; minimum scatter shield dimension is 3/16" thick by 4" wide and must be painted white. mandatory. Scatter shield must be designed to contain flywheel/clutch assembly or direct it into the ground and must extend to frame rail top height on both sides.
10. Holes may not be drilled in scatter shields.

B. Flywheel/Clutch
1. The car must have a working clutch that is functional. The clutch assembly may be of O.E.M. standard replacement or racing manufacture.
2. The method for checking for a legal flywheel shall be by use of a magnet on the flywheel. If a flywheel is non-magnetic, the flywheel is assumed to be aluminum and thus illegal.
3. RAM couplers will be allowed if used with a flex plate.
4. If a flywheel is drilled or machined to an extent that the tech inspector deems unsafe, the tech inspector can request that the flywheel be removed and replaced.

C. Differential
1. Differential assembly must be from American-made pony cars.
2. Rear-wheel-drive only.
3. Rear-end gears may be locked by welding or installing a mini-spool. No full spools allowed.
4. No quick-change rear-ends or floaters allowed.
5. Rear-ends may not be narrowed.
6. No 9" Ford center section.
7. No aluminum rear-end parts.

8. No ratios deeper than 4.11 to 1.
9. No torque sensor devices allowed. No limited slip rear ends.

[7] ENGINES

A. Stock configuration Ford 2000, 2300; GM 140, 151; or Chrysler 2.2 engines.

B. Bore, stroke and rod length shall be:

	Bore	Stroke	Rod
GM 151	4.000"	3.000"	6.000"
GM 140	3.500"	3.625"	5.700"
Ford 2000	3.570"	3.030"	5.000"
Ford 2300	3.781"	3.126"	5.200"
Chrysler 2.2	3.440"	3.620"	5.945"

Cylinders may be bored to a maximum of .060 over stock.

C. Exhaust systems must be mounted in such a way as to direct gasses down and/or back from the cockpit and away from area of possible fuel spillage.

D. Flat-top, valve relief or dished pistons only. Pistons must be three-ring. Floating wristpins are allowed. Coated bearings and pistons are allowed. Piston, wrist pin and rings must weigh a minimum of 510 grams. Wrist pin must be stock outside diameter (OD) for the engine being used.

Wrist pin height - center of wrist pin to top of piston:

	Min.	Max.
GM 151	1.560	1.528
GM 140	1.480	1.480
Ford 2000	1.588	1.588
Ford 2300	1.578	1.598
Chrysler	1.572	1.573

E. Crankshaft and connecting rods must be O.E.M. to block with no lightening, grinding or polishing of any type. No marine parts. Absolutely no strokers. Balancing is allowed. O.E.M. stock steel rods only.

F. Camshaft may be performance type, but absolutely no roller cams, roller followers, roller rockers or roller lifters. Valve lift shall be no more than .525 inches at the valve. No reverse rotation engines allowed.

G. No grinding, porting or polishing of any kind is allowed on heads and intake manifolds, including no matching of gaskets. Head may be milled or angle-milled on block mounting surface only. Head may be machined for solid cam. No acid porting allowed. Cam towers on head may be reinforced with welded on straps.

H. Valve diameter must be stock for engine. Valve seat cut: the lowest angle cannot extend more than .250 from the beginning of the 45° angle (valve seat). Stainless steel and undercut valve stem valves are allowed. Valve stems and valve guides must be OEM stock size. No beehive/conical valve springs allowed. Intake and exhaust measurements must be:

	Intake	Exhaust
GM 151	1.720	1.500
GM 140	1.625	1.375
Ford 2000	1.653	1.418
Ford 2300	1.739	1.500
Chrysler 2.2	1.600	1.390

I. No dry-sump oiling. No external pump oiling. Homemade pans or aftermarket pans allowed. Must be removable for teching crank and rods. Factory oil filter mounted oil cooler allowed.

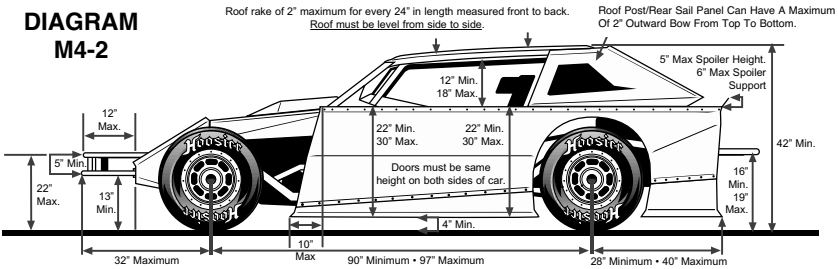

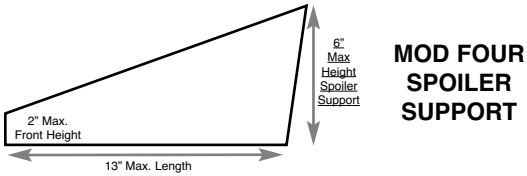

J. No dual camshaft heads.
K. No reverse cooling. Water pump and pulley must be O.E.M. to block. No aluminum water pumps on Fords.
L. No D-port heads, D-port intake manifolds, turbo heads or turbo intake manifolds.
M. Engine offset must remain inside frame rails.
N. Engine setback shall be a minimum 60" from centerline of axle housing to the back of the engine block.
O. Tachs and gauges
   1. No digital tach or gauges. No rev-limiters allowed.
   2. Aftermarket timing belt tensioner allowed.
   3. Crankshaft power pulley is allowed.
   4. Aftermarket timing belt and adjustable timing belt pulleys or sprockets are allowed. Must remain OEM diameter.
P. Radiator - One (1) radiator only; must be mounted in front of engine and must not protrude from the car.
Q. No titanium engine parts allowed.
R. Surge tank hose can enter into water pump. Surge tank cannot hold more than one half gallon of coolant and must be located in engine compartment.
S. One 12 volt battery allowed only.
T. No oil accumulators.

[8] ASPIRATION - FUEL

A. A fuel cell is required.
B. Fuel cells other than metal must be enclosed in a minimum 20-gauge steel container.
C. A fuel cell hoop of minimum 1-1/4" X 14-gauge in the back and extending down below the fuel cell is required.
D. Single 5200-series pony car carb; E.G.R. plate O.E.M. to engine, if used, must be bolted - not welded - to manifold. On GM 151 c.i.d. engines, the use of a redrilled EGR plate, bolted - not welded - to the manifold, is the only acceptable mounting. Choke plates may be removed. No milling or grinding on choke tower, top of carburetor or intake Chrysler and GM 151 c.i.d. - large venturi goes outside. Carb fuel inlet is always forward. Number 6500 carburetors are not allowed. Replacing throttle shaft bushings in carb base

is allowed.

E. Bottom of carburetor can be no more than 1" above the E.G.R. plate [or intake manifold, if no E.G.R. plate is used]. No spacer between E.G.R. plate and manifold may be used. EGR plate, if used, may be modified. No devices can be added to the inside of the intake to increase or redirect the airflow.

F. Carburetor throttle plate & bore must be stock: primary throttle bore 32.0 mm maximum and secondary throttle bore 36.00 mm maximum. Primary venturi diameter 26.00 mm, secondary bore 27.0 mm maximum.

G. No floatless carburetors allowed.

H. No blowers or turbo-chargers.

I. Stock O.E.M. to engine 2-barrel intake manifold only.

J. Distributor must be stock. Ford 2000 may use Ford 2300 ignition system. Ignition box must match distributor and must be O.E.M. Aftermarket distributor gear and intermediate shaft is allowed. Ford TFI ignition system allowed on Ford engines only. This system has the module mounted to the distributor. OEM aftermarket coil is allowed.

K. Fuel: Gasoline only, up to E-98 Ethanol is allowed. May make changes to the carb to enable the use of ethanol. No alcohol, nitrous oxide or nitro. No nitrous devices allowed. No methane. No oxygenated fuel other than ethanol is allowed.

L. One (1) fuel line only connected to carb. No vacuum lines on carb or on intake manifolds.

M. Electric fuel pumps allowed, but they must be wired into the oil pressure system to prevent them from pumping without oil pressure.

N. Holley 4412 carburetor is allowed only if used with WISSOTA spacer/restrictor from Speedway Motors p/n 135-1955.

O. Car weight must be displayed on both front roof posts in clear view of officials.

[9] ALUMINUM

A. No aluminum body shocks, drive shafts, flywheels or rear-end parts.

2020 WISSOTA PURE STOCK RULES

Revised 11-19

NOTICE: PLEASE NOTE THAT THIS CLASS IS ALSO REQUIRED TO COMPLY WITH ALL WISSOTA RULES SET FORTH IN:

SECTION 1 .....GENERAL RULES
SECTION 2 .....GENERAL POLICIES
SECTION 3 .....MINIMUM SPECIFICATIONS
SECTION 4 .....POINT SYSTEM
SECTION 6 .....ENGINE PROTEST RULE
SECTION 7 .....ENGINE PUMPING RULE

IN FRONT OF THIS RULE BOOK.

WISSOTA Pure Stock drivers must follow all WISSOTA safety rules found in the front of the rule book.

[1] BODIES

A. All bodies must be stock production (steel) bodies. Stock steel replacement panels allowed. No manipulating of body contours is allowed. Steel hoods may be gutted. If the factory hood is aluminum, it cannot be gutted. Rear quarter windows can be tinned-in.
B. Body and doors must match frame. No trucks except El Camino & Ranchero.
C. Firewall, floorboards and trunk area must remain stock and in stock location. No welding firewall to frame. OEM rubber bushings or homemade bushings of aluminum, plastic, or steel must be same size as OEM. No cutting of floor boards, no boxing-in of the driver's compartment.
D. Wheel wells may be trimmed, but must remain stock appearing. Rear inner fenders must remain. Trunk area must be sealed off from driver's compartment.
E. No ground effects, skirts or spoilers allowed.
F. Anything you can unbolt, you can remove.
G. Inner part of doors may be removed.
H. All doors must be securely fastened.
I. Radiator must remain in stock location. Radiator support not required.
J. Racing radiators of stock design allowed.
K. Aftermarket racing steering columns are allowed but must have a slip joint or a double U-joint. No solid shafts allowed. Quick disconnect steering wheels are allowed. Aftermarket floor shifters allowed. You can use a push button type ignition switch.
L. Numbers must be contrasting colors and easily seen by lap counters.
M. Numbers must be placed on front and rear of car, both sides and top.
N. Front inner fender reinforcements may be removed.
O. Aftermarket nose cones are permitted but must be stock in appearance.
P. Must have stock trunk lid for type of car.
Q. All other components/modifications disallowed if not specifically allowed in rules.

[2] CHASSIS AND WHEEL BASE

A. Any Ford or GM full framed car, or Chrysler with a 108 inches or larger wheelbase, allowed with a 1 inch wheel base tolerance allowed (this does not mean 1 inch per side).
B. No cars allowed with a strut assembly or rack and pinion steering or independent rear suspension.
C. No four wheel drives or front wheel drives. No Camaros, Novas or Mustangs.
D. Must use stock or stock appearing rear bumper.
E. Front bumper can be a tube bumper with a nose cone.
F. Two chains per bumper to be mounted solid to frame to secure bumper.

G. Rear frame rails behind rear axle can be replaced.
H. Hardened axles can be used and are recommended.
I. Engines must remain in stock location with factory mounts or aftermarket steel mounts but must be mounted in factory V8 frame holes.
J. No altering of suspension parts or mounting location.
K. All other components/modifications disallowed if not specifically allowed in rules.

[3] SUSPENSION – FRONT AND REAR

A. All front and rear suspension must remain stock for make and model.
B. Sway bar must be connected and shims must be the same height on each side.
C. Upper A frame bolts must be stock length. No offset upper A frame mounts allowed.
D. Stock type shocks only; no racing shocks (front and rear shocks must be the same length on each side compressed and extended). No modification of shocks or manufacturer's mounting location.
E. No racing springs, no cargo springs. Stock replacement only and must remain in stock position. No altering of springs allowed. No progressive springs allowed.
F. Stock replacement springs allowed. For GM cars, an 18 mm wrench must fit over any portion of the front springs without any cleanup of the spring; a 15mm wrench must fit over any portion of the rear springs with no cleanup of the springs. For Ford cars, a 17mm wrench must fit over any portion of the front springs without any cleanup of the spring; a 19mm wrench must fit over any portion of the rear springs with no cleanup of the springs. For Mopar cars, the rule is to be determined (see www.wissota.org for updates).
G. Springs must match side to side must have the same amount of wraps side to side; must have the same height side to side and must have the same coil rod size side to side.
H. The free standing height on springs must be within one half inch side to side.
I. Leaf springs must have the same arch, not to vary more than one half inch inch side to side. Left and right side must have the same amount of leafs. All of the leafs must be the same width and thickness.
J. No helper springs.
K. Locked rear ends allowed. Welded or mini spools only. No aluminum mini spools.
L. Rear ends must be stock for car. No limited slip differentials. Rear end gears must come stock for the year and make of car being used. G-bodied cars: 241, 256 or 273 gears.
M. No 9 inch ford differentials.
N. No concealing of any suspension parts.
O. Trailing arms must match side to side. No offset trailing arm bushings. No greasable bushings. Must be stock OEM rubber bushings.
P. No extended length or low friction ball joints on top or bottom.
Q. All other components/modifications disallowed if not specifically allowed in rules.

Brakes

A. Stock type brakes only.
B. No racing brake pads.
C. All cars must have working brakes on all four wheels at all times.
D. Proportioning valve may be removed or altered. No adjustable brakes. No balance/bias bars allowed.
E. All other components/modifications disallowed if not specifically allowed in rules.

Roll Cage

A. Main cage must be a minimum of 1.5 inch mild O.D .095 steel tubing or .062 chrome moly tubing. Must have at least three door bars in the left door excluding frame, and a fourth door bar is strongly recommended. A driver window vent bar is mandatory must run from top door bar to the roll bar which runs to halo. A minimum of 1/8 inch steel plate must be welded from top door bar extending down to at least the bottom door bar, extending the length of the drivers compartment. Any roll cage determined to be unsafe by tech officials may be disqualified.

B. Must be mounted to frame in at least four places. If side rails are used they must be flush with the body and mounted solid to cage.
C. Cage must consist of hoop over driver's head.
D. All tubing welds must be full radius welds.
E. No collapsing, hammering or smashing of tubing to join them. Must use properly notched tubing.
F. No solid tubing allowed in the construction of cage, front or rear hoops and supports. Safety vent bar is mandatory on all cars. It must run from top door bar to A pillar bar on left side of car.
G. All other components/modifications disallowed if not specifically allowed in rules.

[4] TRANSMISSION

A. Stock automatic transmission only (transmission must be able to bolt to motor without alterations).
B. You may fabricate a transmission mount, but must use the stock cross member.
C. Torque converter must match transmission and motor. Stock type torque converter only. No aftermarket stall converters. No converters smaller than 11 inches.
D. Metric 200 transmissions are allowed. No powerglides.
E. No lock-up torque converters.
F. All gears must stay in the transmission.
G. A transmission cooler is allowed. The cooler or cooler lines cannot be inside cockpit.
H. All other components/modifications disallowed if not specifically allowed in rules.
I. A driver may protest another driver's transmission for inspection. The fee is $200. The procedures for protests are outlined in Section 6 near the front of the rule book.

[5] EXHAUST SYSTEM

A. Stock exhaust manifolds only.
B. Exhaust system must be mounted in such a way as to direct spent gases away from the cockpit area of the vehicle and away from possible fuel spillage.
C. Heat risers may be removed.
D. No center dump exhaust manifolds.
E. No header shaped manifolds.
F. Exhaust manifold exit must measure under 2¼" cold. Must have manufactured mufflers. Exhaust can exit any place under car as long as it is directed away from the driver.
G. All other components/modifications disallowed if not specifically allowed in rules.

[6] ENGINES

A. 305 GM, 302 Ford, or 318 Mopar only. No intermarriage of engine to frame.
B. Engines may be bored to a maximum of .040 overbore.
C. No fuel injectors. No turbos.
D. Stock or stock replacement cast dish pistons only and must be an ashtray style piston. Must be full dish.
E. No angle milling or performance enhancing work on heads or block.
F. No vortex heads.
G. No grinding of any castings. Surfacing to clean up cylinder heads allowed. Combustion chambers must still CC correct stock volume.
H. Crankshafts may be cleaned up to .020 under on rods and mains.
I. Valve springs may be shimmed. Rotators are not needed. Spring shield may be removed.
J. Heads must match the make and C.I.D of the engine.
K. GM head numbers allowed: 10065205, 10065207, 10159551, 10159553, 12509859, 1410201, 14014415, 14014416, 14014440, 14020555, 140022301, 14022601, 14022801, 14039122, 1403912, 14101081, 14102187, 14102191, 354434, 358741, 376450.
L. Ford 302 block numbers allowed: D80E, D70E, D50E.
M. Ford cylinder head numbers allowed: F3ZE, F4ZE only.
N. Ford cylinder head numbers GT40P and F77E are not allowed.

O. Mopar cylinder heads allowed: 2658234, 2843675, 3769973, 4027163, 4027593.
P. Rocker arm ratios allowed: GM 1.5, Ford 1.6, Mopar 1.5. Long slot rockers are allowed.
Q. Must use stock valve spring retainers. GM p/n 10241744 retainers are allowed.
R. Valves must be stock dimensions.
S. Pinning of studs is allowed or you may use screw-in studs. All studs must be stock O.D. No collared studs. Only work allowed on stud towers is drilling for pinning and cutting for threads.
T. No offset keyed cranks. Dampener must match C.I.D.
U. Poly lock rocker arm nuts allowed.
V. May degree cams. Double roller timing sets allowed.
W. No roller cams. Max 420 lift on cam.
X. No balancing of motors.
Y. Stock cast iron or aluminum intakes only.
Z. Stock distributor only (stock working order); vacuum advance may be disconnected and removed. No MSD type high performance distributors.
AA. Aftermarket coils allowed.
AB. No propane or marine intakes allowed.
AC. Must have stock oil pan.
AD. Valve covers may have 2 breathers on driver's side and can be steel or aluminum.
AE. Aftermarket air filters allowed. Air flow carburetor hats are not allowed.
AF. Thermostat may be removed.
AG. Alternator may be removed.
AH. Aluminum engine pulleys allowed.
AI. EGR valve may be removed and holes may be plugged.
AJ. Aftermarket power steering pump is allowed.
AK. May use stock replacement type fuel pump; you cannot alter frame for fuel pump.
AL. Lifter galley trays are allowed.

[7] CARBURETORS

A. GM Quadrajet 4-barrel or stock Holley 4412 2-barrel carburetor allowed.
B. Stock Ford Motorcraft 4-barrel or stock Holley 4412 2-barrel carburetor allowed.
C. Mopar stock Holley 4412 2-barrel carburetor allowed.
D. 4-barrel carbs must match intake.
E. On Holley 4412 carburetors, air horn maybe removed.
F. Choke mechanisms may be removed from carburetor.
G. No stacking of gaskets. Maximum gasket material between carb and intake is 3/8". No carb spacers allowed with Quadrajet or Motorcraft carb.
H. If carb adapter plate is required, spacer must have two round holes and be one-piece and maximum 1" thick. No high performance adapters allowed. Spacer opening must be perpendicular to the base of carburetor. Aluminum spacer only. No adjustable spacers or sliders allowed. Max. 3/8" total gaskets between intake and carb.

[8] FUEL & ASPIRATION

A. 110 octane maximum.
B. Racing fuel allowed. No oxygenated fuel.
C. No performance enhancing additives.
D. All other components/modifications disallowed if not specifically allowed in rules.

[9] WHEELS AND TIRES

A. 8 inch wheels with a 2 inch back space or greater will be allowed. All back spaces must match.
B. A 1 inch max wheel spacer will be allowed on R.R. only. Must have 5/8" wheel studs to use wheel spacers.
C. 5/8" wheel studs are allowed and recommended.
D. 1 inch wheel nuts, steel only, allowed. No aluminum wheel nuts allowed.
E. Factory steel wheels are allowed; back space must match. 5X5 wheels are allowed.

F. Hardened axles are allowed and recommended.
G. The Hoosier WISSOTA 35W tire will be the only tire allowed. Siping, grinding and grooving are allowed. There will be no defacing or altering of manufacturer identification marks or numbers on any tire. No softening or treating of tires or needling is allowed.
H. A bead lock wheel is allowed on the right rear only.
I. All other components/modifications disallowed if not specifically allowed in rules.

[10] WEIGHT

A. All cars must weigh a minimum of 3200 lbs. No tolerance, which means even one pound less is not legal, so check your car at each track (track scales do sometimes vary). Car weight must be displayed on upper front of both doors or both front window posts in clear view of officials.
B. All added weight must be added in the trunk area and painted white. No other weight can be added in any other location including, but not limited to, the frame, under the hood, or any other location.

[11] SHOCK CLAIM

A. All four shocks from one car may be claimed by the driver of another car for $100.00. There is no option for the exchange of shocks; it is an outright claim only. The shock claim fee must be given to the track tech official prior to the start of the night's feature race and the claimed shocks must be removed from the claimed driver's car immediately after the feature. The penalty for not accepting the Pure Stock shock claim is a $100.00 fine, loss of all track and national points, and one year probation. Any driver who denies two shock claims in one calendar year will be penalized with a fineable infraction as described in rule 1.16.6.2 in the WISSOTA rule book.

ALL DISALLOWED IF NOT ALLOWED: If the rules do not specifically allow a part or component, or do not allow a specific alteration or modification to a part or component, then that part, component or modification is disallowed.

2020 WISSOTA HORNET RULES

Revised 11-19

NOTICE: PLEASE NOTE THAT THIS CLASS IS ALSO REQUIRED TO COMPLY WITH ALL WISSOTA RULES SET FORTH IN:

SECTION 1 .....GENERAL RULES
SECTION 2 .....GENERAL POLICIES
SECTION 3 .....MINIMUM SPECIFICATIONS
SECTION 4 .....POINT SYSTEM
SECTION 6 .....ENGINE PROTEST RULE
SECTION 7 .....ENGINE PUMPING RULE

IN FRONT OF THIS RULE BOOK.

This class is for "stock" street cars only. Suspension, engine and drive train must remain stock OEM for make, model and year of car being used. Any and all areas not covered in these rules will be left to the discretion of the track officials; if in doubt, ask a tech official. Officials will uphold the intent of the rules. WISSOTA's tech committe has the right to make rule changes at any time and their decision is final.

There are restriction on Hornet licenses. Please refer to general rules in the front of the rule book for all details.

[1] DRIVERS

All drivers must have a WISSOTA Hornet license. Minimum age may be different at different tracks; check with all tracks you plan to race. All drivers under the age of 18 must have a signed and notarized minor release requiring a parent or guardian signature; also, a copy of a certified birth certificate is required for licensing.

[2] SAFETY

A. All cars will be checked for safety. You will not be allowed to run if your car is deemed unsafe.
B. Car numbers must be at least 18 inches high in and contrasting color to the car. One must be placed on the roof facing the grandstand and there must be numbers on both front doors.
C. You must have a copy of the repair manual for the year, make and model of the vehicle you are racing available at the track. They can be found at most part stores.
D. Safety vent bar is mandatory on all cars. It must run from top door bar to A pillar bar on left side of car.

[3] CAR/CHASSIS/BODY

Any front wheel drive compact car with a maximum wheelbase of 107" or less. No all-wheel drive allowed. No supercharged or turbo charged engines. No convertibles or T-tops or rear steering cars. No two seat sport cars. Vehicle ID number (VIN) must remain in at least one stock location and will be used to determine stock OEM parts. Must have tow chain/cable on both front and rear of car. Tow straps must be a minimum 3/8" cable or 3/8" chain links. All glass, trim, mirrors, lights etc. must be removed. Interior of car must have all flammable parts removed. Dash may be removed; if removed, dash may be tinned in. No gutting of any part of the body and rear hatches must all be intact (inner door skins can be cut out for door bars only). Hood and trunk must be pinned or chained shut. Trunk must be able to be opened (cannot be welded or bolted shut.) Hood and trunk must have stock hinges working and no cutting or gutting allowed. Doors must be welded or bolted shut. No homemade body parts, no sharp edges. If front or rear stock bumpers are removed, they will have to pass inspection. No bull work allowed. Tech inspector(s) will decide if they are safe/legal.

Bumpers must have safety chain/cable holding them on car. Sunroofs must be covered with steel. Car interior must remain open. No chopping, channeling, bracing or shortening of frame or body allowed. Rear side window enclosures are allowed.

[4] WEIGHT

No weight rule. No extra weight of any kind allowed any place in the car, except if told to put in car by tech official. Weight rule may be instituted and adjusted if necessary to maintain competitive balance between cars.

[5] ENGINES & ELECTRONICS

3-cylinder or 4 cylinder in-line engines only. Must have OEM crank, rods, valve sizes, stroke, etc. No engine using variable cam timing allowed. Must remain stock for year, make, model of car being used. No modifications of any kind allowed. All engine and electronic components must be unaltered OEM for the make, model and year of the car being used. That means all computers must be OEM to car being used and unaltered. The computer must be in plain sight so it can be inspected at any time. Computer can be moved but must be in plain sight for inspection. No porting or polishing or milling of any parts. No performance parts of any kind will be allowed. Stock air cleaner that came on the car must be used from air cleaner box to engine. There is a stock compression rule on all engines. All WISSOTA technical and conduct rules will be enforced.

[6] BATTERY

One 12 volt battery only. Must be securely mounted. Battery can be moved to trunk area; must be securely mounted in a marine type case. If battery is left under the hood it must have positive terminal covered.

[7] IGNITION

Stock OEM ignition only. No performance ignition parts.

[8] BRAKES

All four wheels must lock up when inspected and must be stock OEM to make, model and year of car. No brake shutoff or bias adjuster allowed. Still brake lines only.

[9] EXHAUST

Must be completely stock to car being used. Exhaust pipe must be stock size for car. Must have factory manufactured muffler of some kind. Exhaust must run under car and be seen at rear of car. No side or out-of-body side exhaust allowed. Catalytic converter can be removed.

[10] STEERING

All components and mounts must be unaltered OEM to year and make of car being used. Must be in stock location. Quick release steering wheel is allowed.

[11] TRANSMISSION

Must be stock with no modifications allowed. Must be fully functional in all gears at all times. Automatic or manual transmission allowed. Must be stock OEM for year, make and model for car being used. Manual transmissions must have 3" inspection hole in bell housing near the top for easy inspection of the clutch and flywheel, etc. <u>No cars that came with stock limited slip transmission allowed. No aftermarket limited slip transmission allowed</u>.

[12] SUSPENSION

Stock suspension may not be altered. Shocks, springs, struts, sway bars, spindles and hubs must be stock OEM for year, make and model car being used. Rear wheels must track straight and be in alignment with front wheels. No more than five degrees camber allowed on any wheel. 1987 to 1995 Dodge Caravan rear wheel hubs are allowed.

[13] FUEL TANK & FUEL

A. Stock fuel tank may be used provided that its stock location is in front of the rear axle and it is securely fastened. All other tanks must be removed and a racing fuel cell placed in the trunk area with a steel firewall separating it from the driver's compartment. Fuel cell must be 12 gallons or less. Fuel cell must be in a metal container and must be attached with at least four 1/8" x 2" straps. Fuel pump for fuel cell must be wired through the ignition and also have a separate shutoff switch marked with "on/off." Fuel lines must run under the body, not in the driver's compartment. It is recommended that you put a

steel skid plate on any plastic gas tank under the car.

B. Fuel must be pump gas only, maximum 93 octane. No performance additives allowed. No race gas allowed (no Turbo Blue, VP, 110 or E-85). Race gas "purchased at the pump" is not allowed.

[14] TIRES & WHEELS

Stock DOT passenger tires and wheels only. Wheels and tires must be same size. Front and back tires can be different sizes but the tires must be same size on front of car and same size on rear of car. Wheels must be the same side to side, but can be different front to back (for example, aluminum on fronts and steel on backs). All numbers allowed. No mud or snow tires (those designed specifically for mud or snow have a snow flake or mountain on their side and are not allowed). Tires that have "M&S" on them are okay to run. No bias tires allowed. No pipe or protectors welded over tire valve stem. No mud plugs allowed. Maximum 60 series tires only (55 series or wider not allowed). Maximum 6.25" tread face. OEM steel or aluminum wheels: 13, 14, 15 or 16 inch. One inch lug nuts required on steel wheels. No wheel weights allowed. No grinding, grooving or siping tires allowed. No over aggressive tread will be allowed (if you are unsure, ask tech official).

[15] SAFETY Hornet class safety rules shown below supersede the safety rules described in the front of this rule book.

You must follow all other safety rules listed in the front of this rule book. Windshield must have four or more quarter inch or larger bars, evenly spaced directly in front of driver. The driver's side windshield must be covered with a protective screen, covering at least 50% of the windshield (full cover recommended). Driver's side window net is required and must be securely mounted to the roll cage with latch at the top. Racing type seat and seat belt and harness is required. Minimum of four point safety belt system required (five point harness is recommended). Seat belts must be in good condition and no more than five years old (determined by date on the belt's tag); the date tag must be readable. Seat and belts must be mounted to roll bar system (check out new roll bar system). Roll cage must be six point constructed of 1.5 inch outside diameter or larger .095 steel tubing. The cage must be mounted at four points, window post to window post, with 1/8 inch minimum steel plates 6"x 6" to the floor & two additional points to the rear of the car. Rear bars must not extend past the strut towers. The cage must come up around the driver, forming a rectangle on the roof. A cross bar must be welded in the center of the roof bars. Driver's door must have a minimum of three bars with vertical bracing between them. Passenger side door must have a minimum of two bars. Driver's head must remain below the bottom of the roof bars when seated. Racing seat and seat belts must be mounted to the roll bar system. You must add a steel tubing system to the cage that the seat and belts can mount to. The seat has to be mounted on the bottom and at the back rest to the cage. Shoulder belts must be mounted about 2" below shoulder level behind the seat in the center of the seat. You can have one bar running between front strut towers and one between rear strut towers to reinforce them from side to side, but that cannot be attached to roll bar system. A steel door plate required, 1/8" thick by 8"-12" wide, and mounted from front wheel well to back wheel well, welded or bolted. Door plate must be on the outside of the door bars.

[16] CLAIMING (These Hornet Claim Rules Supersede Other Class Claim Rules)

A. Race Cars Subject To Being Claimed - Race cars finishing in positions one through five in the feature, whether running or not, and regardless of whether otherwise disqualified, which have drivers who possess either a full or temporary WISSOTA license for the class.

B. Race Cars Eligible To Claim - Race cars finishing in positions 6-12 in the feature which:

1. Finish on the same lap as the fifth-place car in the feature.
2. Are running at the end of the feature event and whose engine must be running in the claim area.
3. Have drivers who possess a full WISSOTA license in that class.
4. Are appearing at that track as a driver for the second or later time that season.
5. Are otherwise legal under WISSOTA rules.

C. Race Cars Not Eligible To Claim:
   1. Those with drivers possessing only a temporary license.
   2. Those appearing at that track as a driver for the first time that season.
   3. Those not legal under WISSOTA rules.
   4. Anyone owning more than one race car in a class at a race track, if one of their cars finishes in positions one through five in the feature race.

D. Procedure - Complete car can be claimed for $1500 or claimed driver may choose to accept $500 and exchange cars. Safety belts, seat, fuel cell and car number stay with driver being claimed. No person is allowed to claim an individual car more than once during the season. Any driver that refuses a claim will not be allowed to claim another car for a period of not less than one year from the date of the refusal. Only the top five finishers may be claimed. Only 6th through 12th place finishers on the same lap as the 5th place finisher can claim. Only a driver can claim a car. Driver must get out of car, go to the tech official and declare his/her intent to claim and give the required amount of cash to the tech official immediately.

E. Penalties or Sanctions Related To Claims - Any driver who refuses a claim will not be permitted to make a claim for a period of one year after his/her reinstatement date. Any driver who refuses a claim and is subject to a suspension will not be allowed to participate in another WISSOTA class until such time any and all fines are paid and the time of the suspension rendered has been completed.
   1. Withdrawal of claim - If a driver expresses an intent to claim, and tenders the required cash amount and his/her driver's license, and then the driver changes his/her mind and withdraws the claim, then the driver will forfeit all money and awards for the event and shall also lose all points earned to date (both track and national points).
   2. Refusal of claim - A driver who refuses a claim shall be subject to the following penalties, plus driver will be subject to a one-year probation period. A second claim refusal or a car rule violation during the probation period will result in a one-year suspension.
      2.1 First refusal - Upon first refusal to sell, driver forfeits all cash and all contingency winnings for the event, and any trophies earned in the feature, plus loss of all points earned to date (both national and track points). The driver shall be fined $1,000 and suspended for 30 days from all classes.
      2.2 Second refusal - Upon the second refusal, driver forfeits all cash and contingency winnings for the event, any trophies earned in the event, loss of all points earned to date (both national and track). In addition, driver shall be fined $2,500 and suspended for one calendar year from the date of the infraction for all classes.
      2.3 Third refusal - Upon the third refusal, driver forfeits all cash and all contingency winnings for the event, any trophies earned in the event, loss of all points earned to date (both national and track), and the driver shall be banned for life from participating in that class. Driver will not be allowed to race in any other WISSOTA class for a period of one year after the third refusal date.
   3. Claiming Area - Any driver/race car subject to being claimed that avoids going immediately to the claiming area shall be considered to have refused a claim and shall be subject to the penalties for refusal of a claim as outlined above.

[17] AMENDMENTS

Amendments and updates may be made to any of these rules at any time when deemed necessary to maintain competitive balance among cars in this class.

NOTES:

2020 Rule Book • © 2020 WISSOTA Promoters Association

NOTES:

NOTES:

NOTES: